SPECIFICATION – SECTION 10 22 26 (10650) OPERABLE PARTITIONS

PART 1 – GENERAL

1.1 RELATED DOCUMENTS

A. Drawings and general provisions of the Contract including General and Supplementary Conditions and Division 01 Specification Selections apply to this Section.

1.2 SUMMARY

A. This Section includes the following:

1. Manually operated, paired panel operable partitions

B. Related Sections include the following:

1. Division 03 Sections for concrete tolerances required.
2. Division 05 Sections for primary structural support, including pre-punching of support members by structural steel supplier per operable partition supplier's template.
3. Division 06 Sections for wood framing and supports, and all blocking at head and jambs as required.
4. Division 09 Sections for wall and ceiling framing at head and jambs.

1.3 QUALITY ASSURANCE

A. Installer Qualifications: An experienced installer who is certified in writing by the operable partition manufacturer, as qualified to install the manufacturer's partition systems for work similar in material design, and extent to that indicated for this Project.

B. Acoustical Performance: Test operable partitions in an independent acoustical laboratory in accordance with ASTM E90 test procedure and classified in accordance with ASTM E413 to attain no less than the STC rating specified. Provide a complete and unedited written test report upon request.

C. Preparation of the opening shall conform to the criteria set forth per ASTM E557 Standard Practice for Architectural Application and Installation of Operable Partitions.

D. The operable wall must be manufactured by a certified ISO-9001-2015 company or an equivalent quality control system.

E. Indoor Air Quality: Operable partition, movable wall manufacturer's non-wood products must meet the SCS Indoor Advantage™ Gold Certification or equivalent. This approval guarantees conformance to indoor air concentrations meeting Indoor Advantage Gold Indoor Air Quality Certified to SCS-105 v4.2-2023 Conforms to ANSI/BIFMA M7.1 and X7.1 and the CDPH/EHLB Standard Method (CA 01350) v1.2-2017 conducted in an independent third-party air quality testing laboratory.

1.4 REFERENCE STANDARDS

A. ASTM International

1. ASTM E557 Standard Practice for Architectural Application and Installation of Operable Partitions.
2. ASTM E90 – Standard Test Method for Laboratory Measurement of Airborne Sound Transmission Loss of Building Partitions and Elements.
3. ASTM C1036 – Standard Specification for Flat Glass.
4. ASTM C1048 – Heat Treated Flat Glass – Kind HS, Kind FT Coated and Uncoated Glass.
5. ASTM E84 – Surface Burning Characteristics of Building Materials
6. ASTM E413 – Classification for Rating Sound Insulation

B. Health Product Declaration Collaborative

1. Health Product Declaration Open Standard v2.1

C. International Standards Organization

1. ISO 14021 – Environmental Labels and Declarations – Self-Declared Environmental Claims (Type II Environmental Labeling).
2. ISO 14025:2011-10, Environmental Labels and Declarations – Type III Environmental Declarations – Principles and Procedures
3. ISO 14040 :2009-11 Environmental Management – Life Cycle Assessment – Principles and Framework.

4. ISO 14044 :2006-10, Environmental Management – Life Cycle Assessment – Requirements and Guidelines.
5. ISO 21930 – Sustainability in Buildings and Civil Engineering Works – Core Rules for Environmental Product Declarations of Construction Projects and Services.

D. Other Standards

1. ADA – American Disabilities Act.
2. ANSI Z97.1 – Safety Glazing Materials Used in Buildings.
3. CPSC 16 CFR 1201 – Safety Standard for Architectural Glazing Materials.
4. NEMA LD3 – High Pressure Decorative Laminates

1.5 SUBMITTALS

A. Product Data: Material descriptions, construction details, finishes, installation details, and operating instructions for each type of operable partition, component, and accessory specified.

B. Shop Drawings: Show location and extent of operable partitions. Include plans, elevations, sections, details, attachments to other construction, and accessories. Indicate dimensions, weights, conditions at openings, and at storage areas, and required installation, storage, and operating clearings. Indicate location and installation requirements for hardware and track, including floor tolerances required and direction of travel. Indicate blocking to be provided by others.

C. Setting Drawings: Show imbedded items and cutouts required in other work, including support beam punching template.

D. Samples: Color samples demonstrating full range of finishes available by architect. Verification samples will be available in same thickness and material indicated for the work.

E. Reports: Provide a complete and unedited written sound test report indicating thickness and spacing in test specimen matches product as submitted.

F. Create spaces that are healthy for occupants.

1. Furnish products and materials with Health Product Declaration (HPD), Manufacturer Inventory, or other material health disclosure documentation. Products without an HPD or other disclosure documentation are not acceptable.

G. Furnish materials that generate the least amount of pollution.

1. Furnish products and materials that have third party verified Environmental Product Declarations (EPDs). Consider products and materials that have optimized environmental performance (reduced life cycle impacts). Products without an EPD or other disclosure documentation are not acceptable.

1.6 DELIVERY, STORAGE, AND HANDLING

A. Clearly mark packages and panels with numbering systems used on Shop Drawings. Do not use permanent markings on panels.

B. Protect panel and glazing materials during delivery, storage, and handling to comply with manufacturer's direction and as required to prevent damage.

1.7 WARRANTY

A. Provide written warranty by manufacturer of operable partitions agreeing to repair or replace any components with manufacturing defects.

B. Warranty period: Eight (8) years

PART 2 – PRODUCTS

2.1 MANUFACTURERS, PRODUCTS, AND OPERATION

A. Manufacturers: Subject to compliance with requirements, provide products by the following:

1. Modernfold, Inc.

B. Products: Subject to compliance with requirements, provide the following product:

1. Acousti-Seal® Legacy® – Paired Panel (932) manually operated paired panel operable partition

2.2 OPERATION

A. Acousti-Seal® Legacy® – Paired Panel (932): Series of paired flat panels hinged together in pairs, manually operated, top supported with operable floor seals.

B. Final Closure ***(Select One)***:

1. Horizontally expanding panel edge with removable crank
2. Hinged panel closure
3. Enclose

2.3 PANEL CONSTRUCTION

A. Nominal 3-inch (76mm) thick panels in manufacturer's standard 48-inch (1220mm) widths. All panel horizontal and vertical framing members fabricated from minimum 16-gage formed steel with overlapped and welded corners for rigidity. Top channel is reinforced to support suspension system components. Frame is designed so that full vertical edges of panels are of formed steel and provide concealed protection of the edges of the panel skin.

B. Panel Skin Options:

1. Roll-formed 21-gage steel wrapping around panel edge. Panel skins shall be lock formed and welded directly to the frame for unitized construction. Acoustical ratings of panels with this construction ***(Select One)***:

    a. 28 STC
    b. 50 STC
    c. 52 STC

2. Roll-formed 21-gage Micro-Perf™ steel wrapping around panel edge provided on 50% of panel faces manufactured with sound absorptive backing. Panel skins shall be lock formed and welded directly to the frame for unitized construction. Acoustical ratings of panels with this construction shall be no less than:

    a. 45 STC (net with NRC construction)
    b. 0.65 NRC with wall covering and upholstery fabric or non-woven needle punch carpet covering

C. Hinges for Closure Panels, Pass Doors, and Pocket Doors shall be:

1. Full leaf butt hinges, attached directly to panel frame with welded hinge anchor plates within panel to further support hinge mounting to frame. Lifetime warranty on hinges. Hinges mounted into panel edge or vertical astragal are not acceptable.
2. Concealed laminated hinge with antifriction segments mounted between each heat-treated link. Hinge to be attached directly to panel frame. Welded internal hinge bracket shall support the hinge and allow for adjustment of hinge plates. Lifetime Warranty on hinges. Concealed hinges mounted into panel edge or vertical astragal are not acceptable.

D. Panel Trim: No vertical trim required or allowed on edges of panels; minimal groove appearance at panel joints.

E. Panel Weights:

1. 28 STC – 6 lbs./square foot
2. 50 STC – 8 lbs./square foot
3. 52 STC – 11 lbs./square foot

2.4 PANEL FINISHES

A. Panel face finish shall be (select as required):

1. Reinforced vinyl with woven backing weighing not less than 21 ounces (595 g) per lineal yard
2. Reinforced heavy-duty vinyl with woven backing weighing not less than 30 ounces (850 g) per lineal yard
3. Acoustical, non-woven needle punch carpet, with fused fibers to prevent unraveling or fray of material
4. Wall covering and upholstery fabric with surface treatment to resist stains
5. Customer's own material (subject to factory approval)
6. Full height steel markerboard work surface
7. Full height ¼-inch (6.35mm) natural cork tackboard with vinyl or fabric covering
8. Uncovered for field finishing
9. Primed for field finishing

B. Panel Trim: Exposed panel trim of one consistent color from manufacturer's standard offering.

1. Dark Bronze
2. Smoke Gray
3. Natural Choice
4. Black

2.5 SOUND SEALS

A. Vertical Interlocking Sound Seals between panels: Roll-formed steel astragals, with reversible tongue and groove configuration in each panel edge for universal panel operation. Rigid plastic or aluminum astragals or astragals in only one panel edge are not acceptable

B. Horizontal Top Seals: Continuous contact extruded vinyl bulb shape with pairs of non-contacting vinyl fingers to prevent distortion without the need for mechanically operated parts

C. Horizontal Bottom Seals ***(Select One)***:

1. Modernfold IA2 Bottom Seal. Automatic operable seals providing nominal 2-inch (51 mm) operating clearance with an operating range of +1/2-inch (13 mm) to -1-1/2-inch (38 mm) which automatically drop as panels are positioned, without the need for tools or cranks.
2. SM2 – Manually activated seals providing nominal 2-inch (51 mm) operating clearance with an operating range of +1/2-inch (13 mm) to -1-1/2-inch (38 mm). Seal shall be operable from panel edge or face. Extended seal shall exert nominal 120 pounds (54 kg) downward force to the floor throughout operating range.
3. SM4 – Manually activated bottom seals providing nominal 4-inch (102 mm) operating clearance with an operating range of +1/2-inch (13 mm) to -3-1/2-inch (89 mm). Seal shall be operable from panel edge or face.

Extended seal shall exert nominal 120 pounds (54 kg) downward force to the floor throughout operating range.

2.6 SUSPENSION SYSTEM *(Select One)*:

A. #17 Suspension System
   1. Suspension Tracks: Minimum 11-gage, 0.12-inch (3.04 mm) roll-formed steel track, supported by adjustable steel hanger brackets, supporting the load-bearing surface of the track, connected to structural support by pairs of 3/8-inch (9.5 mm) diameter threaded rods. Aluminum track is not acceptable.
      a. Exposed track soffit: Steel, integral to track, and pre-painted off-white.
   2. Carriers: One all-steel trolley with steel-tired ball bearing wheels per panel (except hinged panels). Non-steel tires are not acceptable
   3. Warranty period: Ten (10) years

B. #30 Suspension System
   1. Suspension Tracks: Track shall be structural aluminum. Track shall be supported by adjustable steel hanger brackets connected to structural support by pairs of 3/8-inch (9.5mm) diameter threaded rods
      a. Exposed track soffit: Track soffit to be integral to track shape and shall be powder-coated off white paint finish. Track must accommodate termination of plenum sound barriers on both sides of track for maximum sound control
   2. Carriers: One trolley per panel with 3-inch (76mm) diameter glass-reinforced nylon all steel precision-ground ball-bearing wheels. Steel-wheeled or reinforced polymer trolleys on aluminum track not permitted. Trolleys shall attach to panels with ½-inch (13mm) diameter pendent bolt mounted to welded steel mounting plate.
   3. Warranty period: Ten (10) years

C. #14 Suspension System
   1. Suspension Tracks: Minimum 7-gage, 0.18-inch(5mm) roll formed steel. Track shall be supported by adjustable steel hanger brackets connected to structural support of pairs of ½-inch (13mm) diameter threaded rods. Brackets must support the load bearing surface of the track.
      a. Exposed track soffit: Steel, removable for service and maintenance, attached to track bracket without exposed fasteners, and pre-painted off-white
   2. Carriers: One all steel trolley with steel-tired ball bearing wheels per panel (except hinged panels). Non-steel tires are not acceptable.
   3. Warranty period: Twenty (20) years.

D. Modernfold Truss System: Prefabricated, self-supporting header system for the support of operable partitions. (For complete specification see Modernfold Truss System brochure Form #2600)

2.7 OPTIONS

A. Single Pass Doors:
   1. Matching pass door same thickness and appearance as panels. ADA compliant pass door to be trimless and equipped with friction latch and flush pulls for panic operation. No threshold will be permitted.
   2. Hardware:
      a. Hand pull with push plate
      b. Lever handles both sides of door
      c. Panic hardware with or without locking lever handle
      d. Automatic door closer
      e. Door viewer
      f. Self-illuminated exit signs:
         i. Chemical exit sign – recess mount
         ii. Chemical exit sign – surface mount
         iii. Photo luminescent exit sign – surface mount
      g. Window frame options:
         i. Aluminum window frame, glazed or unglazed
         ii. Wood window frame, glazed or unglazed
      h. Inset window glazing options:
         i. 1/4-inch clear tempered glass – aluminum frame or wood frame
         ii. 1/4-inch frosted tempered glass – aluminum frame or wood frame
         iii. 1/4-inch low iron tempered glass – aluminum frame or wood frame
         iv. 1/4-inch low iron frosted tempered glass – aluminum frame or wood frame
         v. 1/4-inch Lexan – aluminum frame
         vi. 1/2-inch clear tempered glass – wood frame

vii. 1/2-inch frosted tempered glass – wood frame
viii. 1/2-inch low iron tempered glass – wood frame
ix. 1/2-inch low iron frosted tempered glass – wood frame
x. 1-inch insulated glass – wood frame

B. Work Surfaces:

1. Markerboard: White enamel on steel, bonded to the face of the panel with horizontal trim without exposed fasteners. Trim is not acceptable on vertical edges to provide uninterrupted work surface.
2. Tackboard: Minimum ¼-inch (6.35 mm) natural cork, covered with vinyl or fabric, with horizontal trim without exposed fasteners. Trim is not acceptable on vertical edges.

C. Available Accessories/Options:

1. Pocket Doors: Acousti-Seal® Pocket Doors by Modernfold, Inc., with same construction, finish, and appearance as the adjacent panels.
2. Finished end caps
3. Intersecting partition interface.

PART 3 – EXECUTION

3.1 INSTALLATION

A. General: Comply with ASTM E557, operable partition manufacturer's written installation instructions, drawings, and approved Shop Drawings.

B. Install operable partitions and accessories after other finish operations, including painting have been completed

C. Match operable partitions by installing panels from marked packages in numbered sequence indicated on Shop Drawings.

D. Broken, cracked, chipped, deformed, or unmatched panels are not acceptable.

3.2 CLEANING AND PROTECTION

A. Clean partition surfaces upon completing installation of operable partitions to remove dust, dirt, adhesives, and other foreign materials according to manufacturer's written instructions.

B. Provide final protection and maintain conditions in a manner acceptable to the manufacturer and installer that ensure operable partitions are without damage or deterioration at time of Substantial Completion.

3.3 ADJUSTING

A. Adjust operable partitions to operate smoothly, easily, and quietly, free from binding, warp, excessive deflection, distortion, nonalignment, misplacement, disruptions, or malfunction, throughout the entire operation range. Lubricate hardware and other moving parts.

3.4 EXAMINATION

A. Examine flooring, structural support, and opening, with Installer present, for compliance with requirements for installation tolerances and other conditions affecting performance of operable partitions. Proceed with installation only after unsatisfactory conditions have been corrected.

3.5 DEMONSTRATION

A. Demonstrate proper operation and maintenance procedures to Owner's representative.

B. Provide Operation and Maintenance Manual to Owner's representative.

STC Construction and Track System Height Limitations			
Acousti-Seal® Legacy® Paired Panel (932)	**28 STC**	**50 STC**	**52 STC**
#17 Direct Mounted Track	14’-4” (4369 mm)	10’-4” (3150 mm)	N/A
#17 Bracket Mounted Track	18’-4” (5588 mm)	17’-4” (5283 mm)	15’-4” (4674 mm)
#17 Bracket Mounted Track (with a pass door)	18’-4” (5588 mm)	14’-4” (4369 mm)	12’-4” (3759 mm)
#14 Bracket Mounted Track	18’-4” (5588 mm)	18’-4” (5588 mm)	18’-4” (5588 mm)
#30 Bracket Mounted Track	18’-4” (5588 mm)	16’-4” (4978 mm)	12’-4’ (3759 mm)
#30 Bracket Mounted Track (with a pass door)	11’-10” (3607 mm)	8’-11” (2718 mm)	N/A

STEEL SKIN PANEL CONSTRUCTION

Acousti-Seal® Legacy® Paired Panels	Acousti-Seal® Legacy® Paired Panels Standard Joint
	Roll-formed vertical frame channel provides added strength while eliminating any sharp edges. The outer covering is secured under the steel astragal to prevent peeling. The complete vertical edge of the panel is steel for maximum durability.
	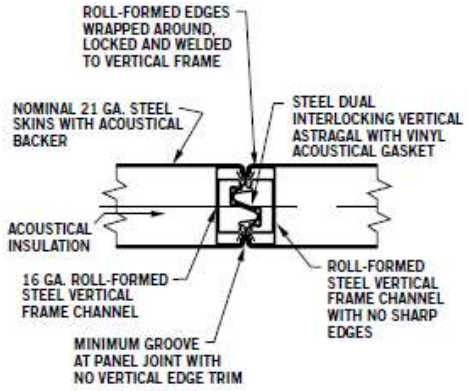
	Heavy steel hinges are mounted directly to the center of the vertical frame channel, not simply on the outside edge of the panel. Steel plates on the back of the channel prevent buckling or bending and provide the strongest hinge connection.

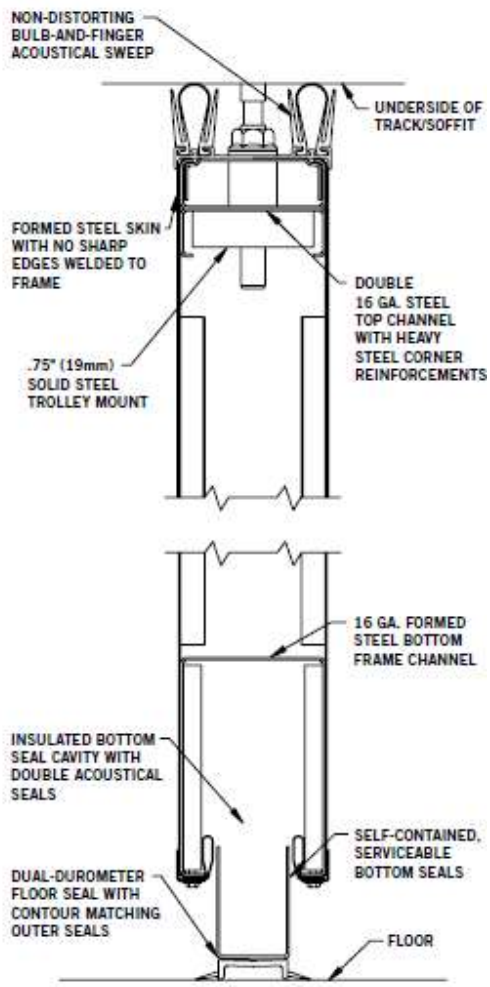

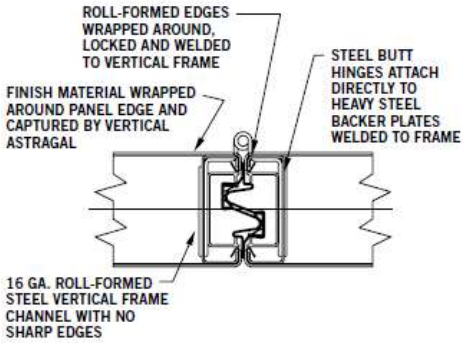

SUSPENSION SYSTEM OPTIONS

#17 Track System Direct Mount	#17 Track System Bracket Mount
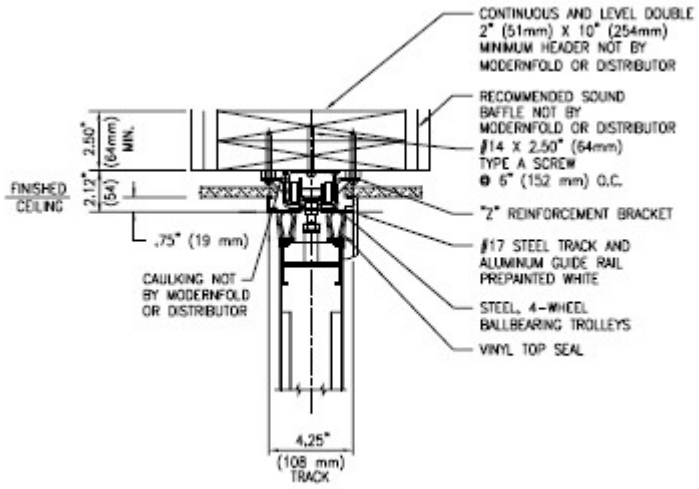	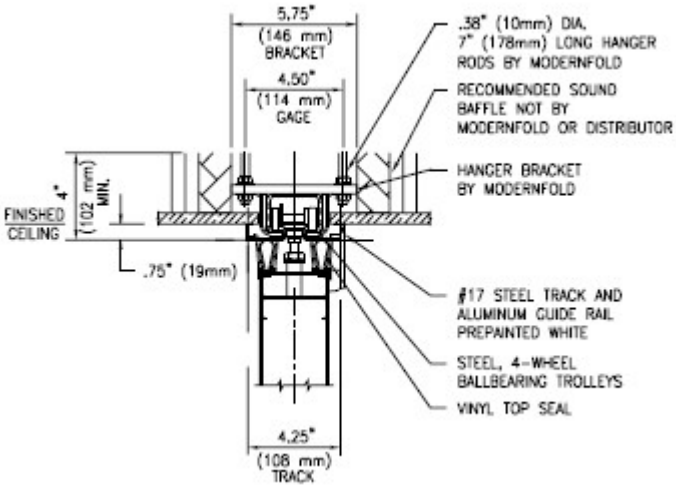

#17 Track System Bracket Mount Heavy Duty – 2.50” Gage	#17 Track System Bracket Mount Heavy Duty – 4.50” Gage
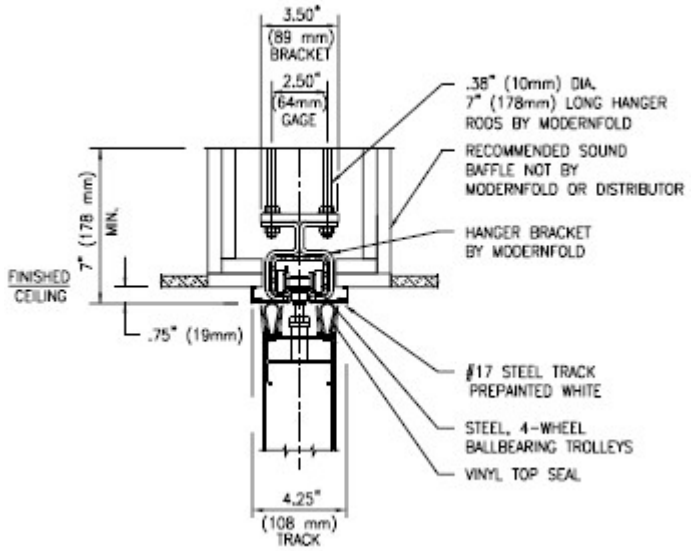	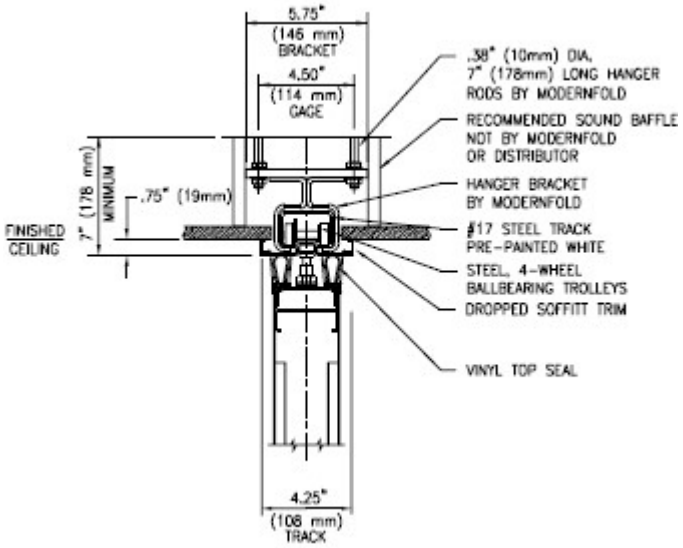

#14 Track System Bracket Mount

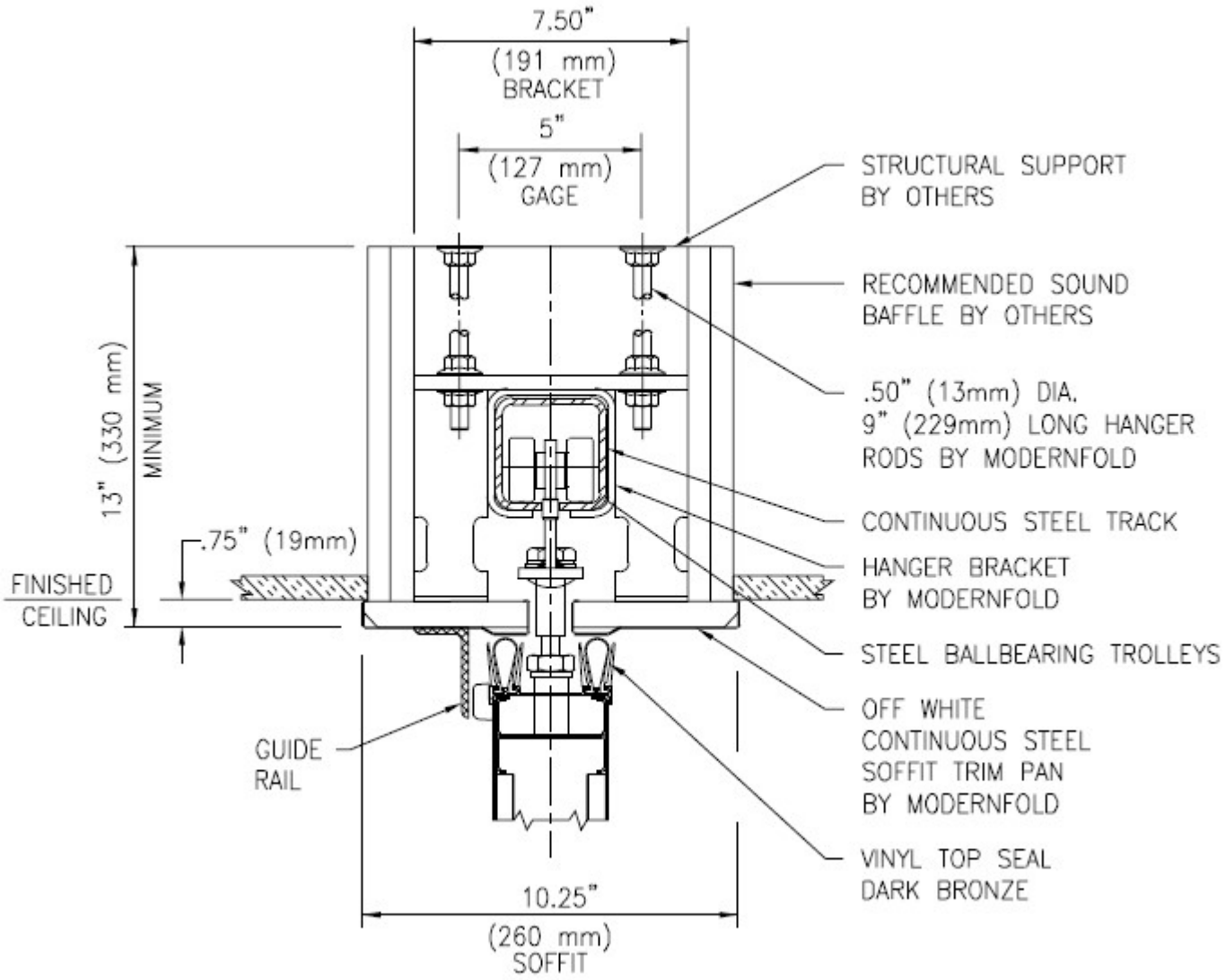

#30 Track System – 2.50” Gage	#30 Track System – 4.50” Gage
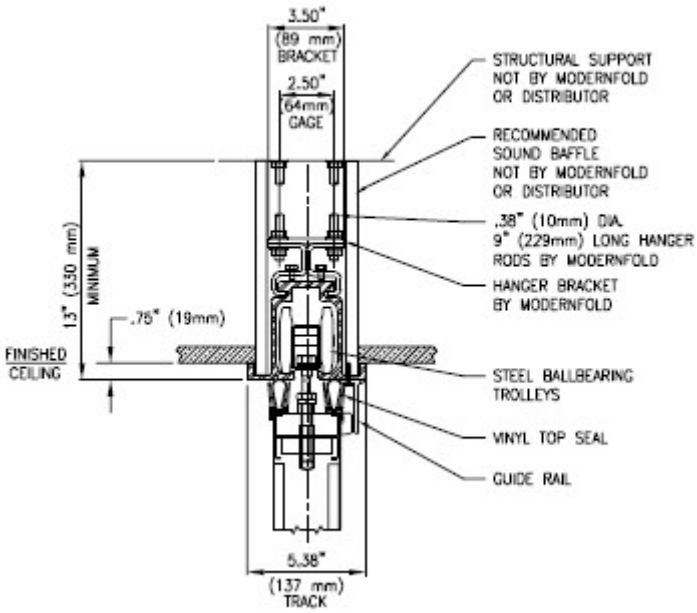	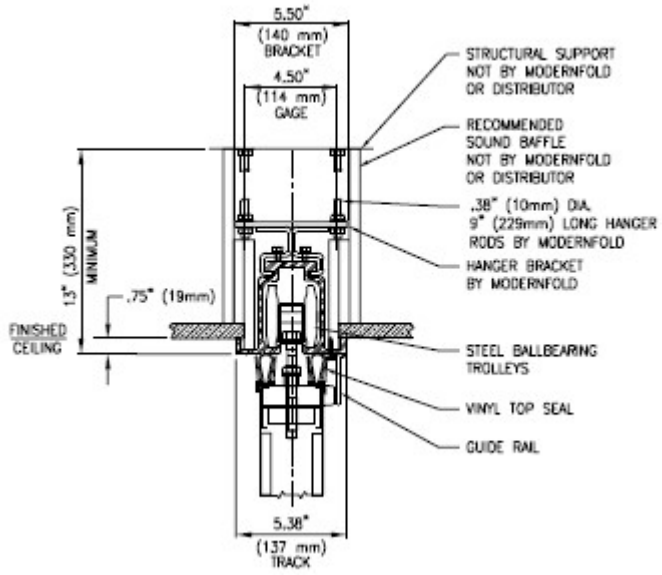

PANEL, WORK SURFACE, AND PASS DOOR OPTIONS

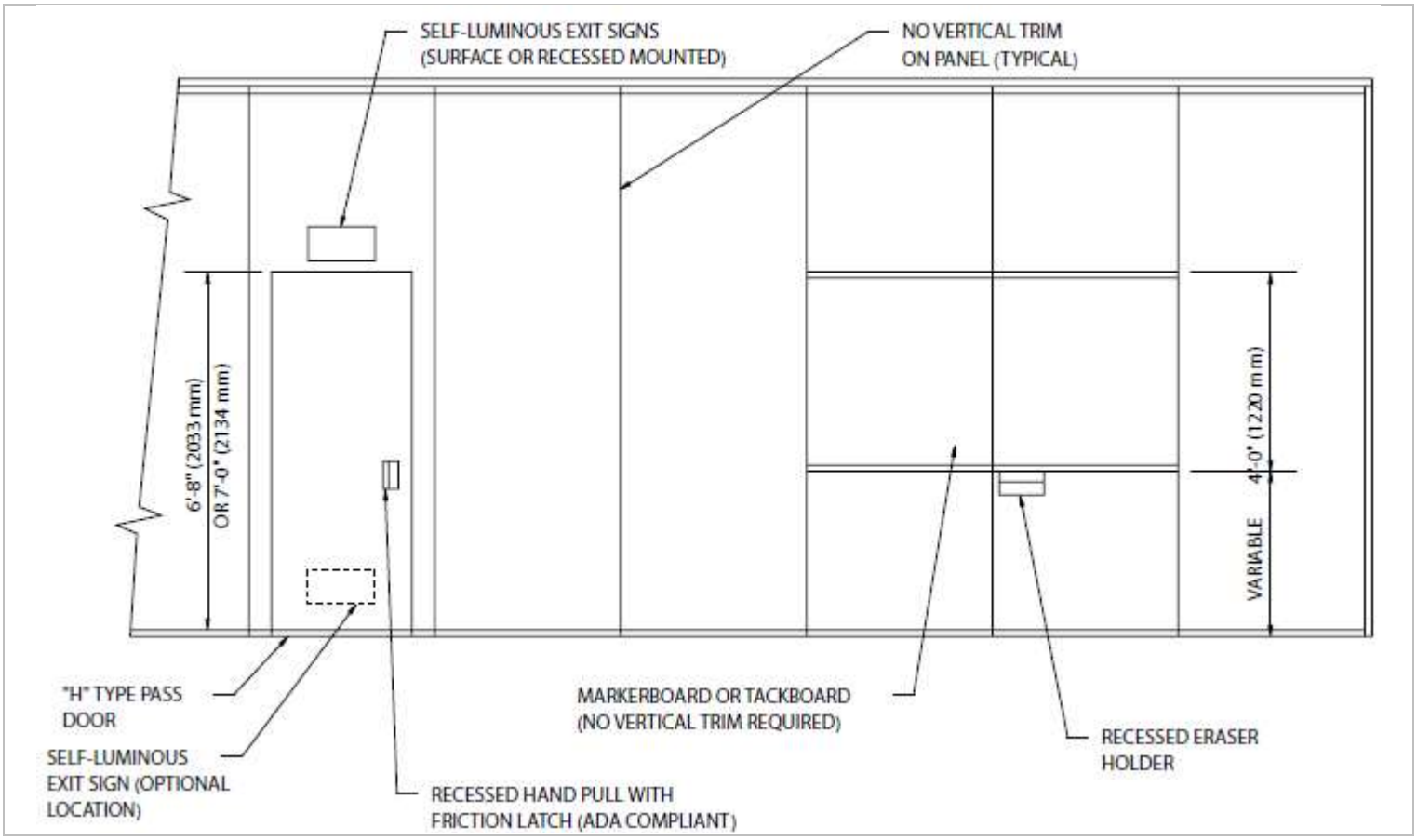

FLOOR SEAL OPTIONS

2-Inch Automatic Seal	2-Inch Manual Seal
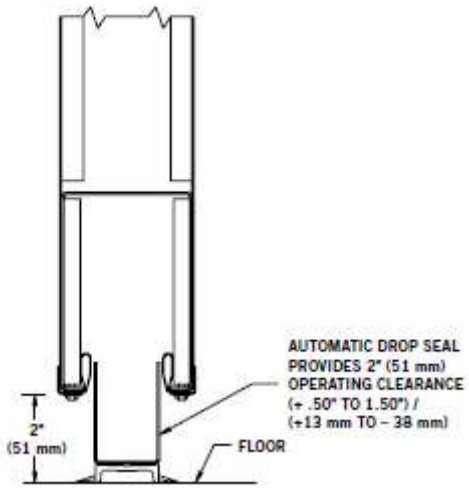	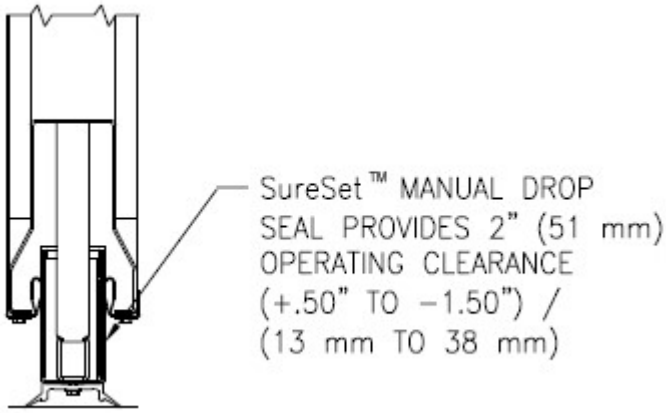
4-Inch Manual Seal	
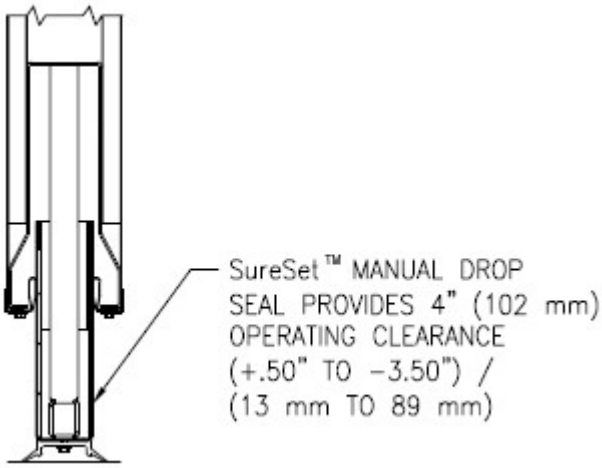	

POCKET ENCLOSURE AND STACKING OPTIONS

Expandable Jamb Closure – Even Panel Quantity

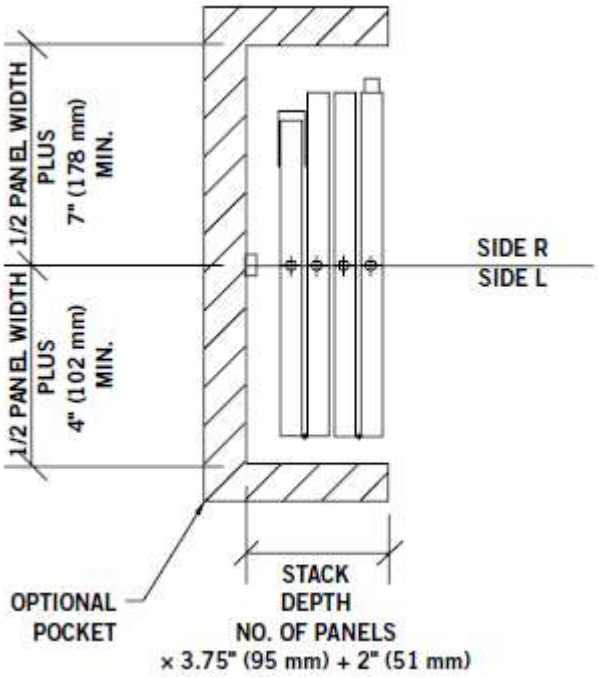

Expandable Jamb Closure – Odd Panel Quantity

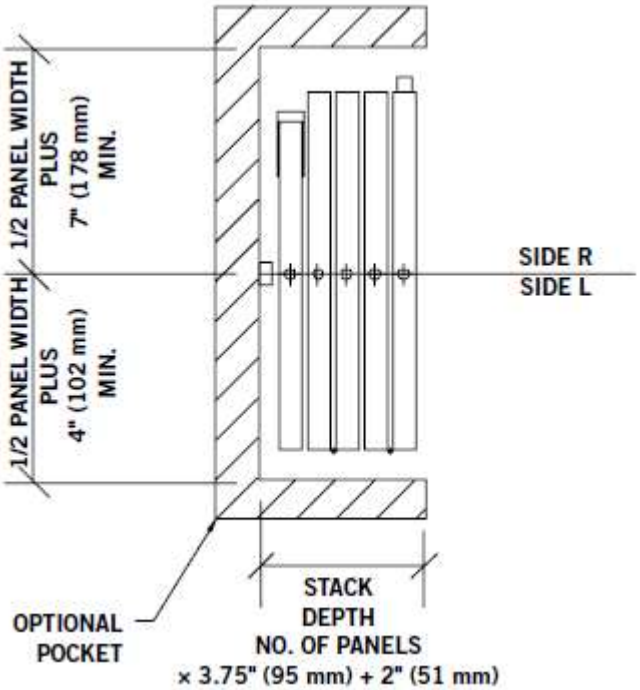

Remote Expandable Jamb Closure

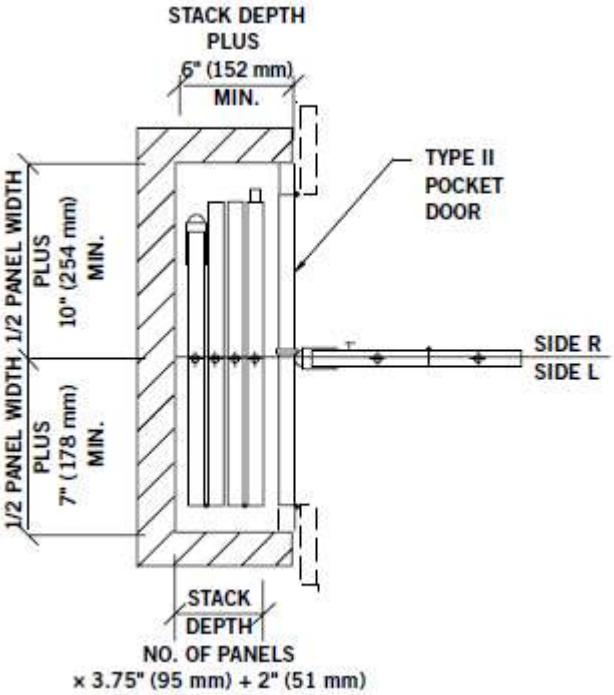

Enclose – Odd Panel Quantity

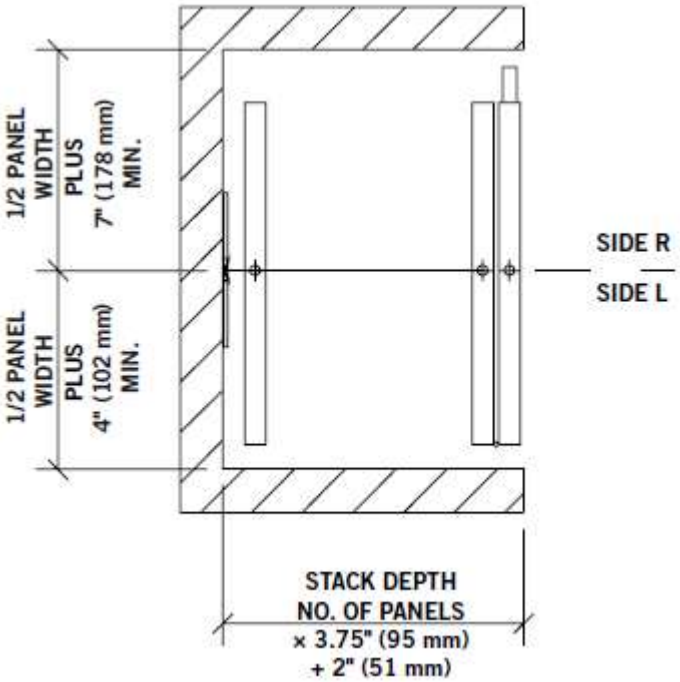

Enclose – Even Panel Quantity

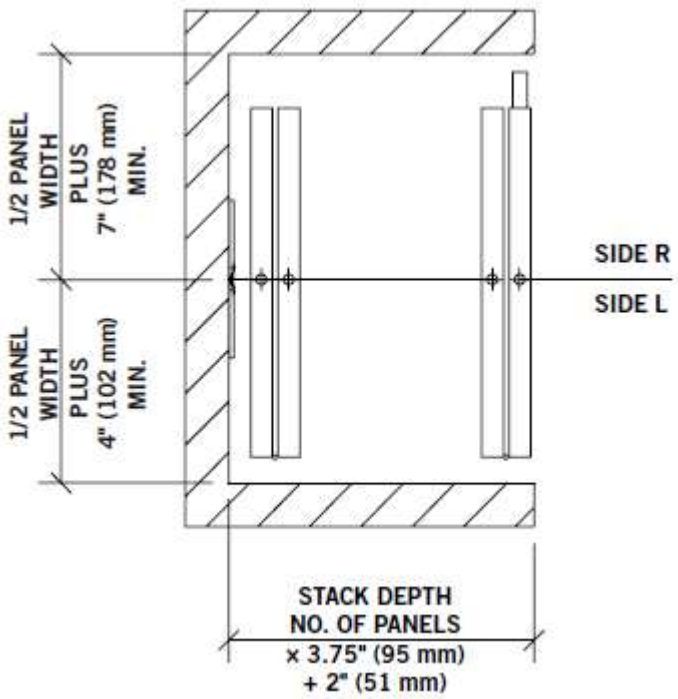

Bi-Fold Hinged Panel Closure

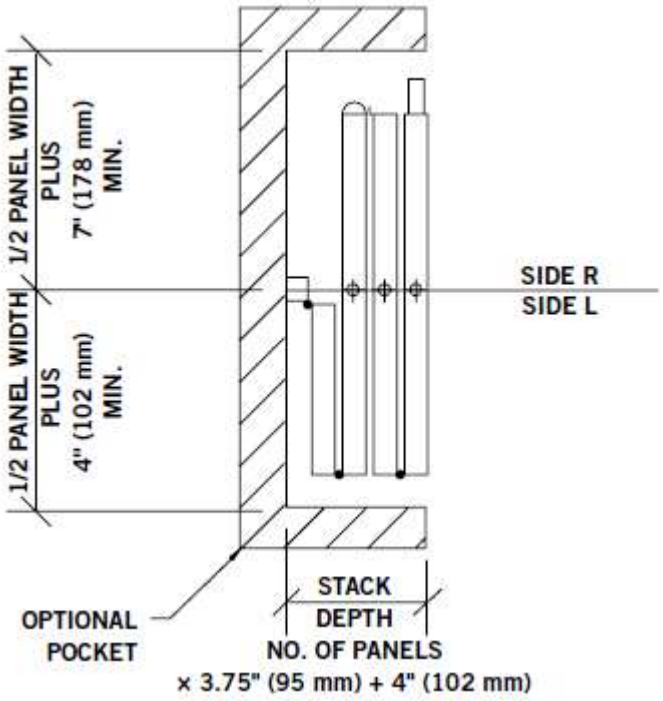

Single Hinged Panel Closure

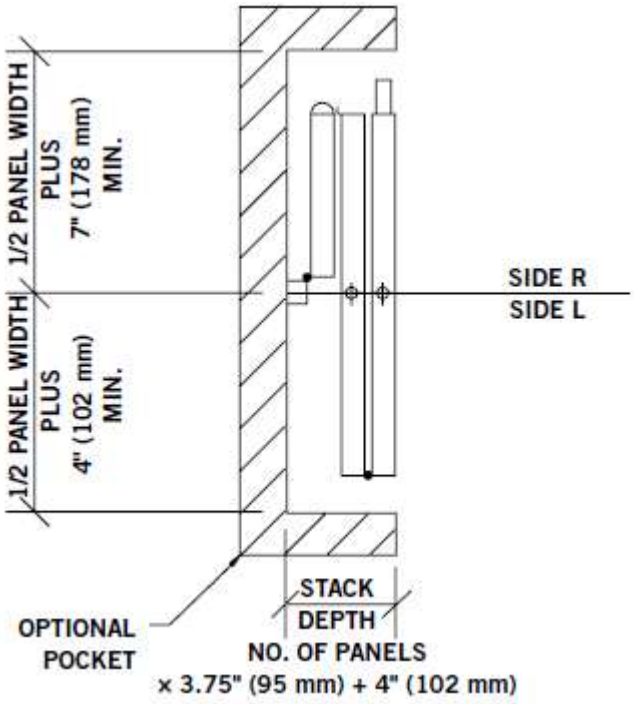

PANEL CROSS SECTION

Hinged Jamb	Expandable Panel with Jamb
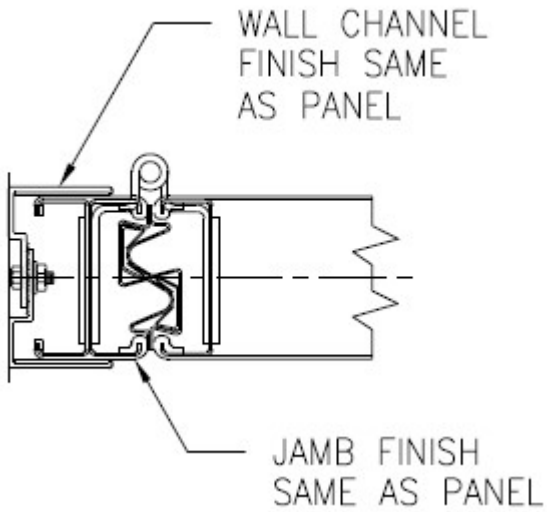	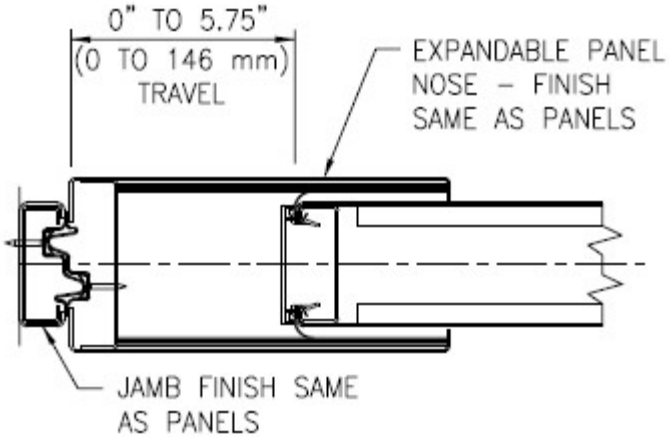
Expandable Panel with Bulb Seal	**Enclose**
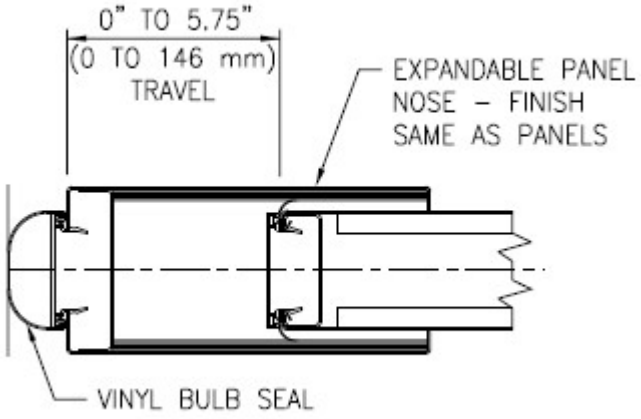	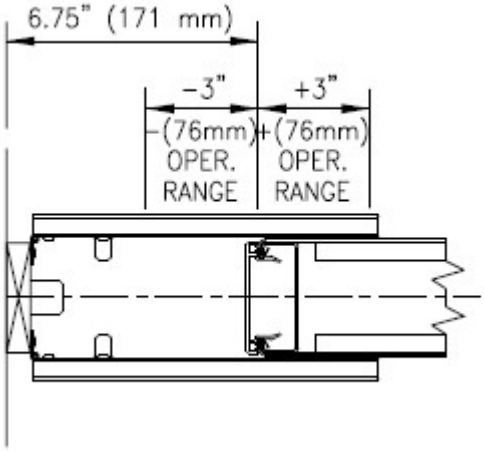

Hinged Panel Meeting with Bulb Seal	Concealed Hinge Panel Joint
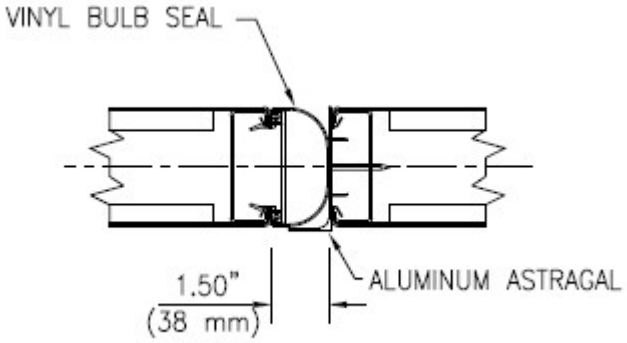	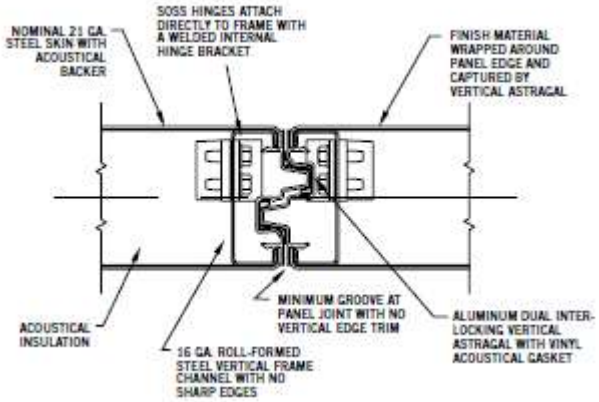
Standard Hinged Panel Joint	**Bulb Seal and Intersection**
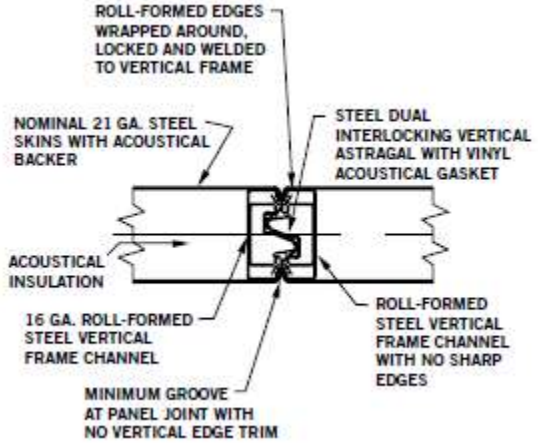	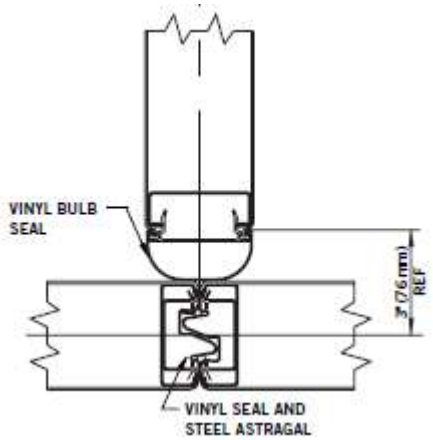
Nominal Fixed Jamb	**Variable Fixed Jamb**
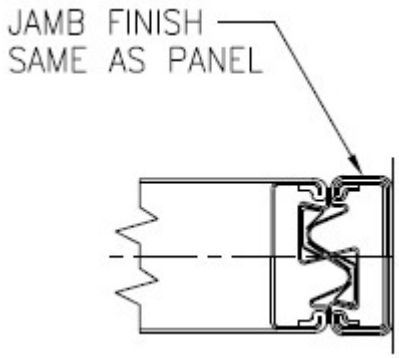	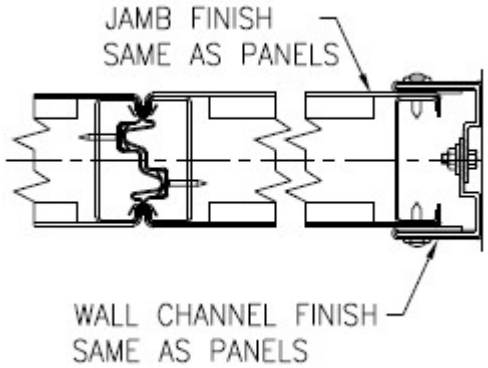

Form 2554
05/2025