SPECIFICATION – SECTION 10 22 26 (10650) OPERABLE PARTITIONS

PART 1 – GENERAL

1.1 RELATED DOCUMENTS

A. Drawings and general provisions of the Contract including General and Supplementary Conditions and Division 01 Specification Selections apply to this Section.

1.2 SUMMARY

A. This Section includes the following:

1. Manually operated, individual glass panel partitions.

B. Related Sections include the following:

1. Division 03 Sections for concrete tolerances required.
2. Division 05 Sections for primary structural support, including pre-punching of support members by structural steel supplier per operable partition supplier's template.
3. Division 06 Sections for wood framing and supports, and all blocking at head and jambs as required.
4. Division 08 Sections for lock cylinders and keying requirements.
5. Division 09 Sections for wall and ceiling framing at head and jambs.

1.3 QUALITY ASSURANCE

A. Installer Qualifications: An experienced installer who is certified in writing by the operable partition manufacturer, as qualified to install the manufacturer's partition systems for work similar in material design, and extent to that indicated for this Project.

B. Preparation of the opening shall conform to the criteria set forth per ASTM E557 Standard Practice for Architectural Application and Installation of Operable Partitions.

C. The operable wall must be manufactured by a certified ISO-90001-2015 company or an equivalent quality control system.

1.4 REFERENCE STANDARDS

A. ASTM International

1. ASTM E557 Standard Practice for Architectural Application and Installation of Operable Partitions.
2. ASTM E90 Standard Test Method for laboratory measurement of airborne sound transmission loss of building partitions and elements.
3. ASTM C1036 – Standard Specification for Flat Glass.
4. ASTM C1048 – Heat Treated Flatt Glass – Kind HS, Kind FT Coated and Uncoated Glass.

B. Health Product Declaration Collaborative

1. Health Product Declaration Open Standard v2.1

C. International Standards Organization

1. ISO 14021 – Environmental Labels and Declarations – Self-Declared Environmental Claims (Type II Environmental Labeling).
2. ISO 14025:2011-10, Environmental Labels and Declarations – Type III Environmental Declarations – Principles and Procedures
3. ISO 14040 :2009-11 Environmental Management – Life Cycle Assessment – Principles and Framework.
4. ISO 14044 :2006-10, Environmental Management – Life Cycle Assessment – Requirements and Guidelines.
5. ISO 21930 – Sustainability in Buildings and Civil Engineering Works – Core Rules for Environmental Product Declarations of Construction Projects and Services.

D. Other Standards

1. ADA – American Disabilities Act.
2. ANSI Z97.1 – Safety Glazing Materials Used in Buildings.
3. CPSC 16 CFR 1201 – Safety Standard for Architectural Glazing Materials.

1.5 SUBMITTALS

A. Product Data: Material descriptions, construction details, finishes, installation details, and operating instructions for each type of glass panel partition, component, and accessory specified.

B. Shop Drawings: Show location and extent of operable glass panel partitions. Include plans, elevations, sections, details, attachments to other construction, and accessories. Indicate dimensions, weights, conditions at openings, and at storage areas, and required installation, storage, and operating clearings. Indicate location and installation requirements for hardware and track, including floor tolerances required and direction of travel. Indicate blocking to be provided by others.

C. Setting Drawings: Show imbedded items and cutouts required in other work, including support beam punching template.

D. Samples: Color samples demonstrating full range of finishes available by architect. Verification samples will be

available in same thickness and material indicated for the work.

E. Reports: Provide a complete and unedited written sound test report indicating thickness and spacing in test specimen matches product as submitted.

F. Create spaces that are healthy for occupants.

1. Furnish products and materials with Health Product Declaration (HPD), Manufacturer Inventory, or other material health disclosure documentation. Products without an HPD or other disclosure documentation are not acceptable.

G. Furnish materials that generate the least amount of pollution.

1. Furnish products and materials that have third party verified Environmental Product Declarations (EPDs). Consider products and materials that have optimized environmental performance (reduced life cycle impacts). Products without an EPD or other disclosure documentation are not acceptable.

H. Buy American: Glass wall products are to be manufactured in the United States in compliance with appliable U.S. Federal Trade Commission and U.S. Customs Service and Border Protections regulations and be labeled “Made in America”.

1.6 DELIVERY, STORAGE, AND HANDLING

A. Clearly mark packages and panels with numbering systems used on Shop Drawings. Do not use permanent markings on panels.

B. Protect panel and glazing materials during delivery, storage, and handling to comply with manufacturer’s direction and as required to prevent damage.

1.7 WARRANTY

A. Manufacturer’s Special Project Warranty on Glass Panels: Provide written warranty signed by the manufacturer of glass operable partitions agreeing to replace those panels with manufacturing defects.

1. Manufacturing defects are defined as any defect materially obstructing vision through the glass, and mechanical failure of hardware which prevents the proper operation of the panels after appropriate installation.
2. Warranty period: Five (5) years.

PART 2 – PRODUCTS

2.1 MANUFACTURERS, PRODUCTS, AND OPERATION

A. Manufacturers: Subject to compliance with requirements, provide products by the following:

1. Modernfold, Inc.

B. Panels to be manufactured in the U.S.A.

C. Products: Subject to compliance with requirements, provide the following product:

1. Modernfold Glass Wall Model PureView – Paired Panel with 4-1/8-inch (105mm) square top and bottom rails.

2.2 OPERATION

A. Modernfold Glass Wall Model PureView Paired Panel: Series of paired glass panels hinged together in pairs, manually operated and top-supported. Panels use two-piece, clamp-on top and bottom rail that fastens together from alternating sides:

1. Final Closure ***(Select One)***:

a. Pivot panel

b. Standard intermediate panel ending within storage pocket, or at face of storage pocket.

2.3 PANEL CONSTRUCTION

A. Provide top reinforcement as required to support panel from suspension components and provide reinforcement for hardware attachment. Fabricate panels with concealed fasteners. Finished in-place partition shall be rigid, level, plumb, aligned with uniform joints and appearance, free of bow, warp, twist, deformation, and surface and finish irregularities.

B. Dimensions: Fabricate operable glass panel partitions with manufacturer’s standard panel sizes to form an assembled system of dimensions indicated on Drawings and verified by field measurements.

1. Maximum panel width: 48-inches (1219 mm)
2. Standard rail thickness: 1-9/16 inches (40 mm)

C. Top and Bottom Rails: Continuous two-piece assemblies with removable end caps. Rails fasten together from alternate sides of partition allowing for field adjustment to job site conditions. Snap-on covers are furnished to facilitate installation.

D. Horizontal Top and Bottom Seals: Continuous contact vinyl seals without the need for mechanically operated parts.

E. Bottom Rail Locking System: Engage adjacent panels by use of interlocking floor bolts to stabilize panels from movement in all directions.

1. Equip a minimum of one end panel with a brass, mortised lock allowing for cylinder and/or thumb turn operation. Round bolts engage eccentric bushing floor strikes for security.
2. Pivot panels to have mortised cylinder with key and thumb turn.
3. Intermediate panels to have interconnecting floor bolts.
4. Lead panels to have mortised cylinder with thumb turn.

F. Hinges for panels shall be:

1. Butt hinges attached to top and bottom rails.

G. Acoustical ratings of panels with this construction achieve Sound Transmission Class of (see below) minimum STC when tested in accordance with ASTM E90 and classified in accordance with ASTM E413 ***(Select One)***:

1. 15 STC
2. 33 STC – Fully Framed
3. 35 STC – Fully Framed
4. 37 STC – Fully Framed

2.4 MATERIALS

A. Aluminum: Alloy and temper recommended by aluminum producer and finisher for type of use, corrosion resistance, and finish indicated; ASTM B221 (ASTM B221M) for extrusions; manufacturer's standard strengths and thicknesses for type of use.

B. Glass Type: Tempered, ½-inch (13 mm) complying with safety standards specified in ANSI Z97.1 CPSC16, CFR1201, ASTM C1036 and ASTM C1048.

C. Glass Finish ***(Select One)***:

1. Clear tempered
2. Frosted tempered
3. Low iron tempered
4. Low iron frosted tempered
5. Laminated clear tempered
6. Laminated "Markerboard" low iron tempered "Polar White"
7. Laminated clear tempered – high STC
8. Laminated frosted tempered – high STC
9. Laminated low iron tempered – high STC
10. Laminated low iron frosted tempered – high STC
11. Laminated "Markerboard" low iron tempered "Polar White" – high STC

D. Panel Weight: 7.5 lbs./square foot

2.5 PANEL FINISHES

A. Provide top and bottom rails with one of the following finishes ***(Select One)***:

1. Clear anodized aluminum
2. Dark Bronze anodized aluminum
3. Black anodized aluminum
4. Satin stainless anodized aluminum
5. White Powder Coat (RAL9016)
6. Black Powder Coat (RAL 9004)
7. RAL "Classic" (Solids collection Powder Coat available provided in one of the following ***(Select One)***:
    a. Glass finish (80-85° gloss)
    b. Satin finish (30° gloss)

2.6 SUSPENSION SYSTEM *(Select One)*:

A. G-330 Suspension System Smart Track

1. Suspension Tracks: Extruded aluminum with a minimum wall thickness of 0.235 inches (6 mm). Incorporate cast aluminum or mitered intersections, switches, and curves in stacking area. Provide alignment pins for track, intersections, switches, and curves insuring both fit and roller surface integrity.
    a. Exposed track soffit: Factory-finished aluminum with white powder coat.
2. Carriers: Two stainless steel trolleys with vinyl roller surfaces. Trolley design incorporates eight (8) wheels of varying dimensions. Automatic indexing of panels into stack area is provided by pre-programmed switches and trolleys without electrical, pneumatic, or mechanical activation.
3. Warranty period: Five (5) years.

2.7 OPTIONS

A. Pass Doors

1. Sliding Swing Door: Top hung operating swing door, rail heights to match partition rails providing uniform appearance.
2. Hardware – Pass Door
    a. Automatic door closer
    b. Door pulls back-to-back
        i. 12-inch (305 mm) tubular pull
            a. Clear anodized
            b. Black anodized
            c. Dark bronze anodized
            d. Satin stainless steel
        ii. Manet 1204mm "Ladder Pull" - stainless steel
        iii. TG-138 49-inch (1245 mm) locking "Ladder Pull" – satin stainless steel
    c. Mortise Cylinder Floor Locks

B. Automatic door closer – Pivot Panel

1. BTS80 floor closer
2. RTS88 ceiling closer

C. Door pull back-to-back – Pivot Panel

1. 12-inch (305 mm) tubular pull
    a. Clear anodized
    b. Black anodized
    c. Dark bronze anodized
    d. Satin stainless steel
2. Manet 1204mm "Ladder Pull" - stainless steel
3. TG-138 49-inch (1245 mm) locking "Ladder Pull" – satin stainless steel

D. Bottom rail cover

1. 4-1/8-inch (105 mm) cover (matches top rail)
2. 10-inch (254 mm) cover

PART 3 – EXECUTION

3.1 INSTALLATION

A. General: Comply with ASTM E557, operable partition manufacturer's written installation instructions, drawings, and approved Shop Drawings.

B. Install operable glass partitions and accessories after other finish operations, including painting.

C. Match operable glass partitions by installing panels from marked packages in numbered sequence indicated on Shop Drawings.

D. Broken, cracked, shipped, deformed, or unmatched panels are not acceptable.

3.2 CLEANING AND PROTECTION

A. Clean metal and glass surfaces upon completing installation of operable glass partitions to remove dust, dirt,

adhesives, and other foreign materials according to manufacturer's written instructions.

B. Provide final protection and maintain conditions in a manner acceptable to the manufacturer and installer that ensure operable glass partitions are without damage or deterioration at time of Substantial Completion.

3.3 ADJUSTING

A. Adjust operable glass partitions to operate smoothly, easily, and quietly, free from binding, warp, excessive deflection, distortion, nonalignment, misplacement, disruptions, or malfunction, throughout the entire operation range. Lubricate hardware and other moving parts.

3.4 EXAMINATION

A. Examine flooring, structural support, and opening, with Installer present, for compliance with requirements for installation tolerances and other conditions affecting performance of operable glass partitions. Proceed with installation only after unsatisfactory conditions have been corrected.

1. Ensure finished floor under operable glass partition is level ± 0.13-inch (3 mm) in ten (10) feet (3048 mm) non-cumulative.

3.5 DEMONSTRATION

A. Demonstrate proper operation and maintenance procedures to Owner's representative.

B. Provide Operation and Maintenance Manual to Owner's representative.

PANEL SECTION

	Max. System Height	Min. Panel Width	Max. Panel Width	Max. Panel Weight
Pivot Panel	* 10’-0”	2’-0”	4’-0”	330 lbs.
Intermediate Panel	* 10’-0”	2’-0”	4’-0”	330 lbs.
Pass Door (Convertible Panel)	* 10’-0”	3’-2”	3’-2”	265 lbs.

*For panels above 10’–0” up to 12’–0”, consult with the factory.
Example: Maximum height is 11’-0” with 4’-0” wide panel and maximum width is 3’-7” with 12’-0” tall panel.

G-330 Track System Bracket Mount

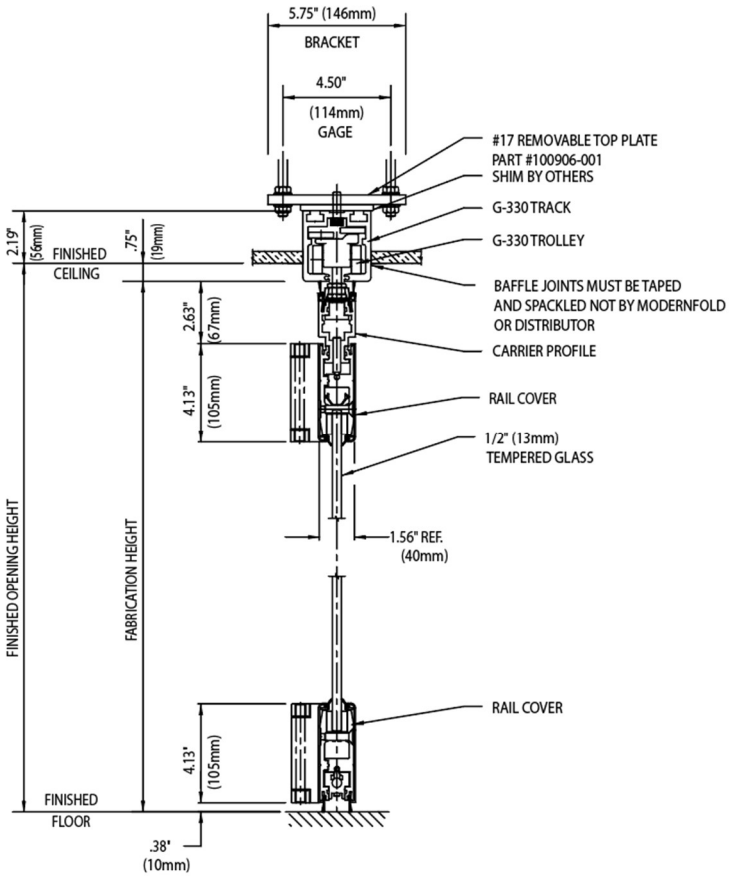

G-330 Track System Direct Mount

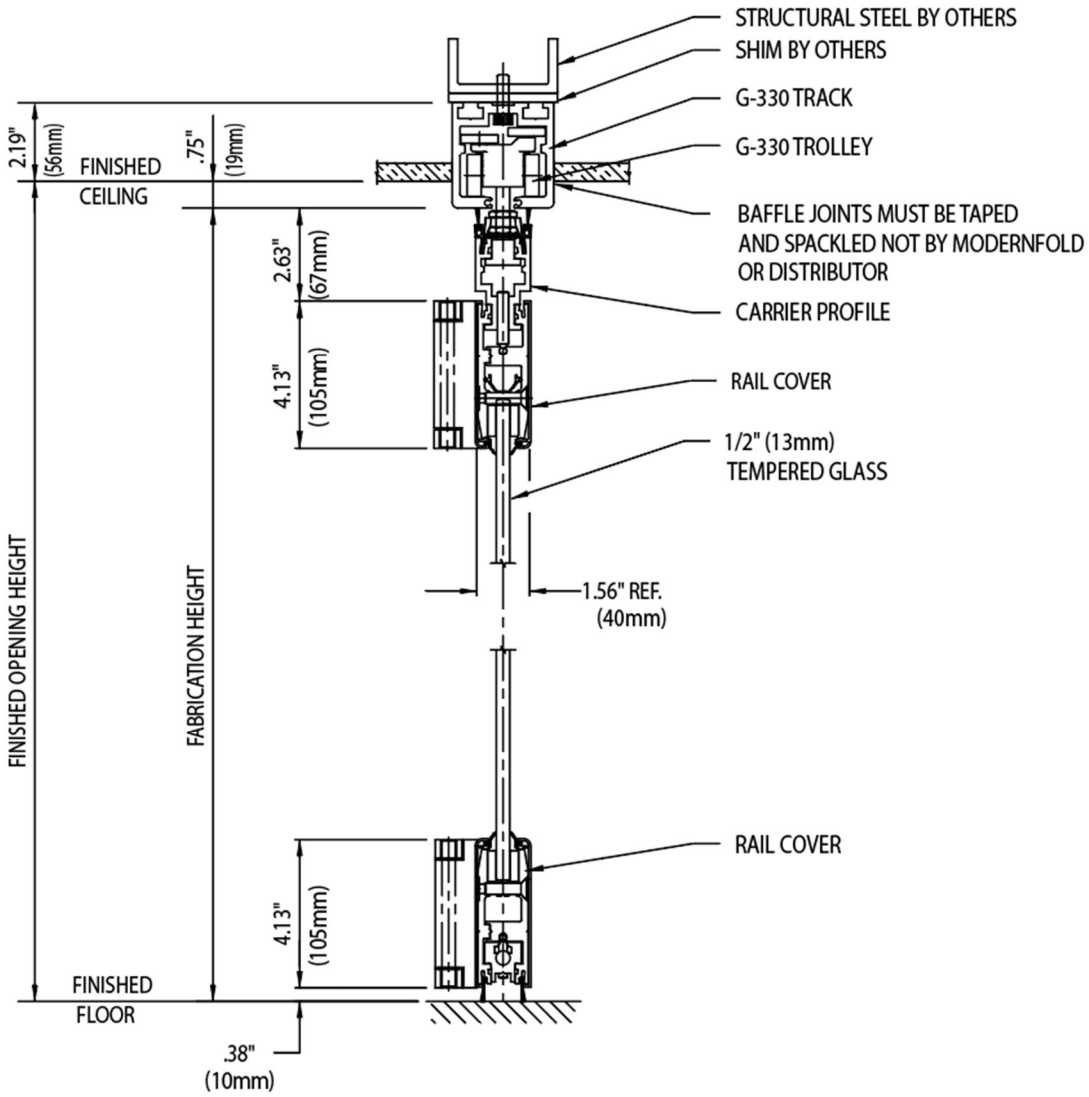

Section Through Pivot Panel with Standard Pivot

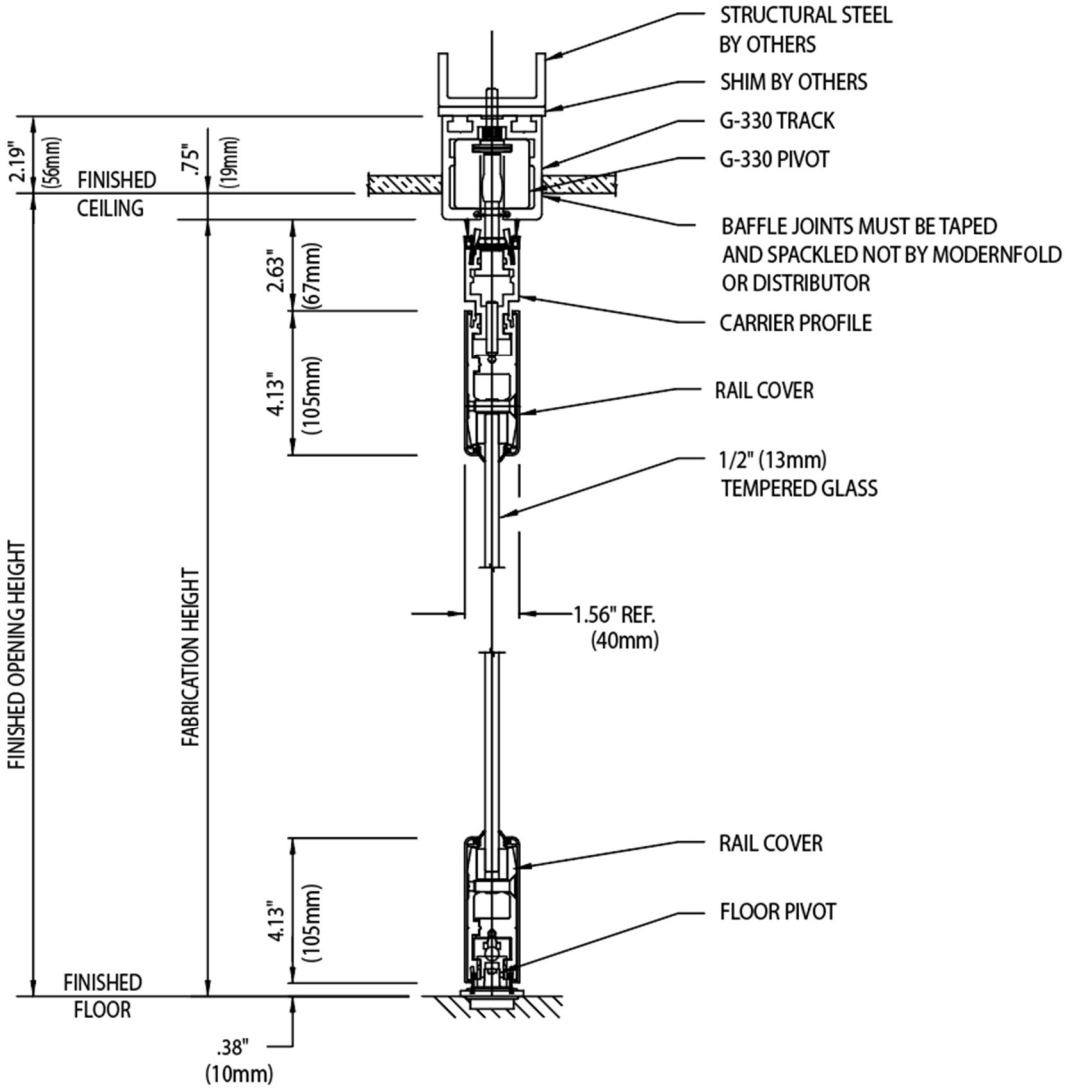

Section Through Pivot Panel with Concealed Bottom Closer

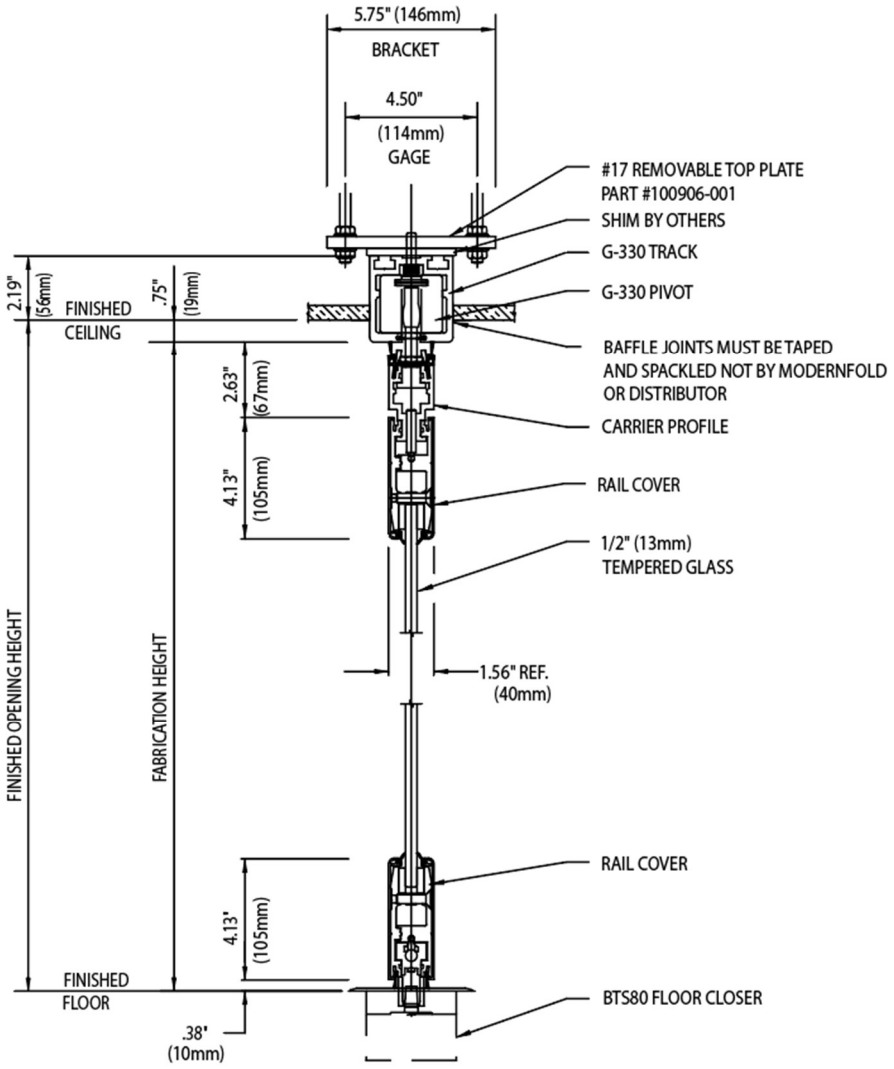

Section Through Sliding Panel with Bottom Lock

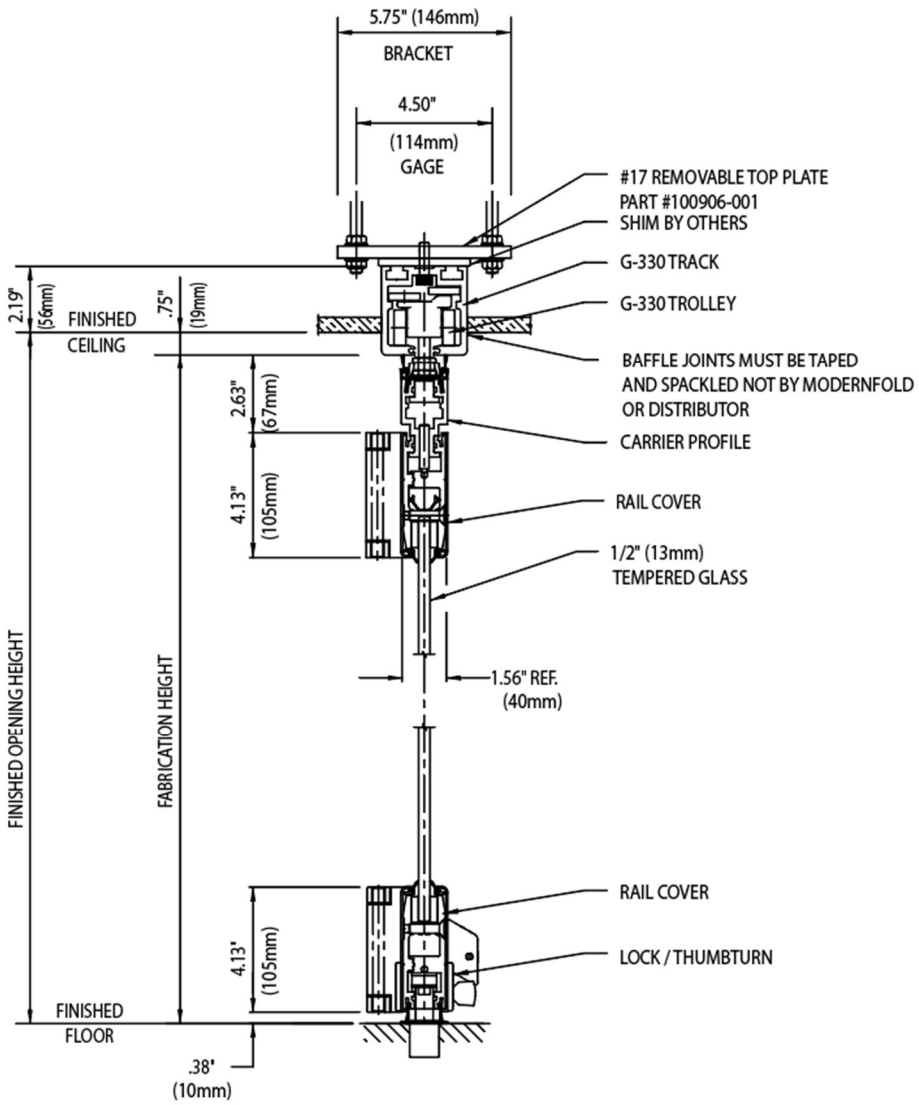

Section Through Pass Door with Concealed Top Closer (G-330 Track System – Bracket Mount)	Section Through Pass Door with Concealed Top Closer (G-330 Track System – Direct Mount)
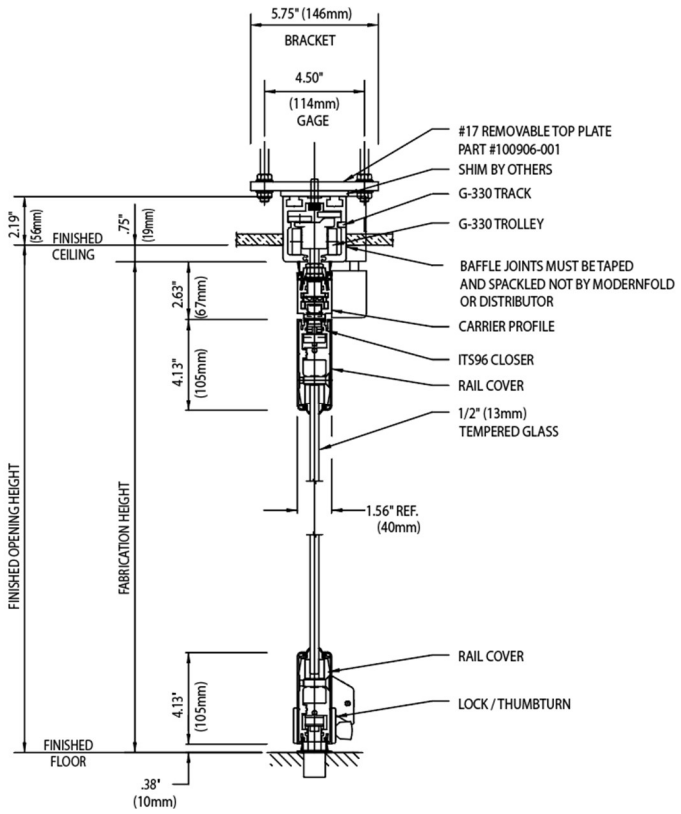	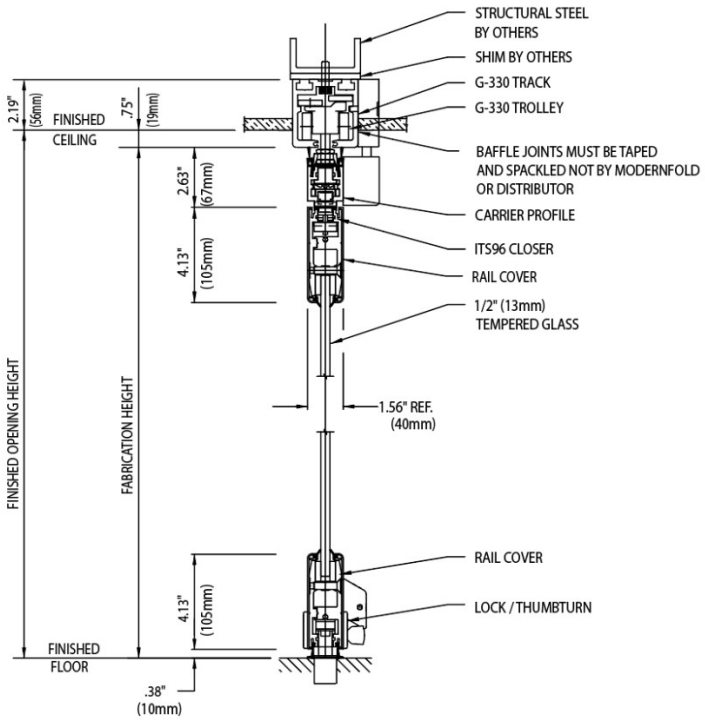

G-330 Track System Bracket Mount – 10” Cover

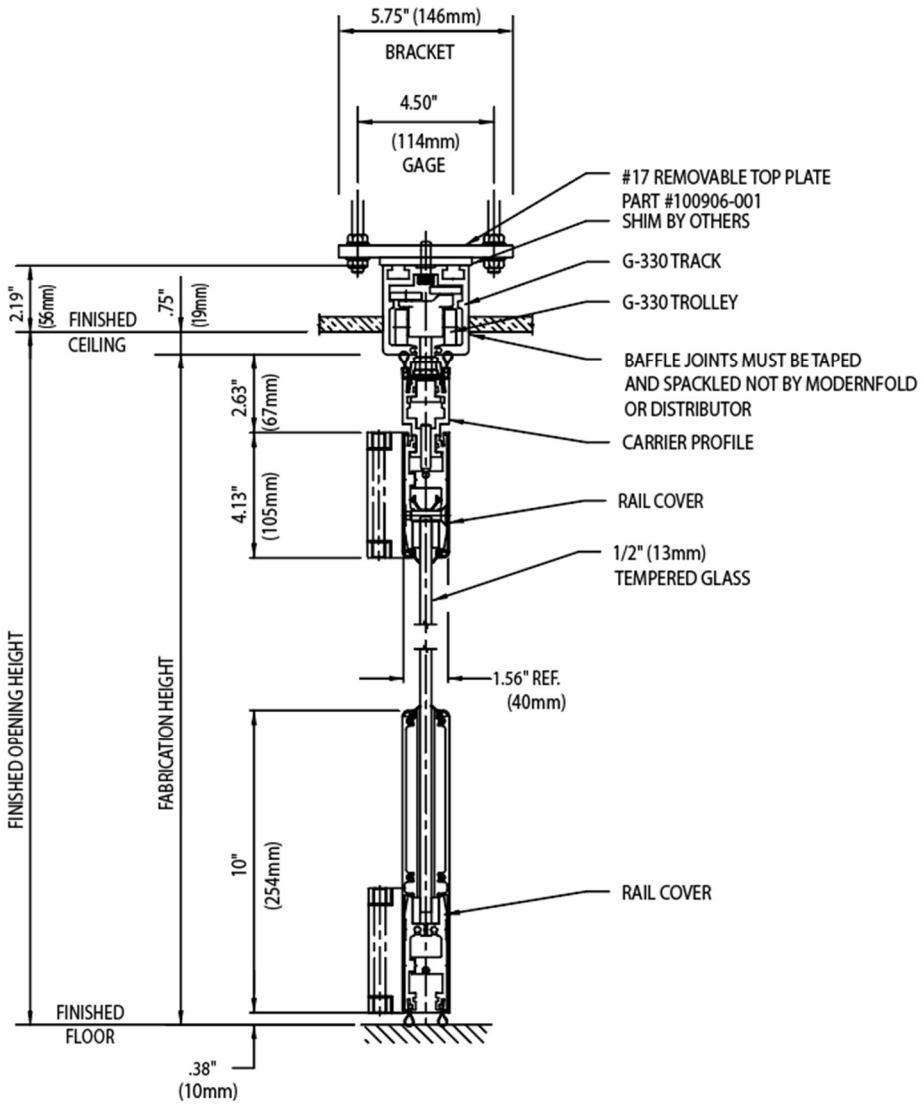

G-330 Track System Direct Mount – 10” Cover

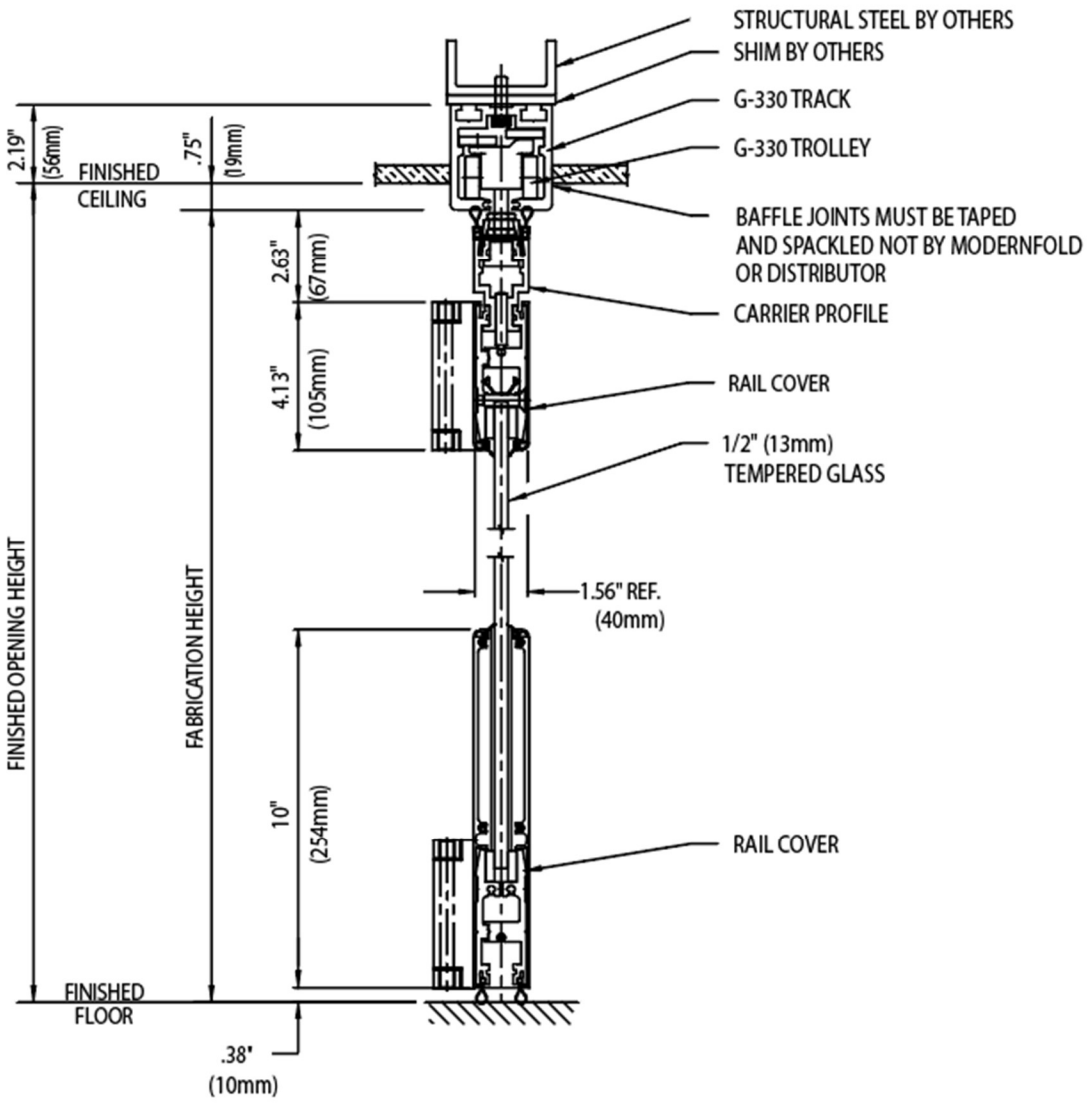

PANEL DETAILS – STACKING CONFIGURATIONS

Pivot Panel for Egress

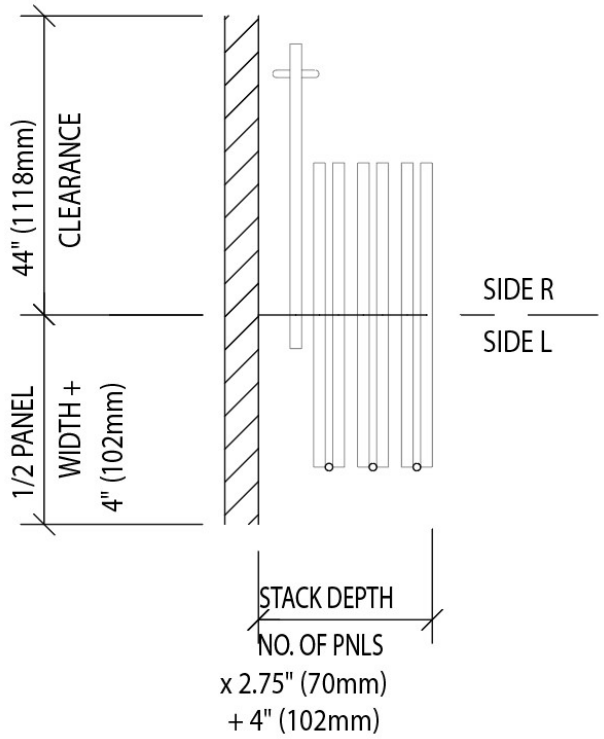

Pivot Panel Closure

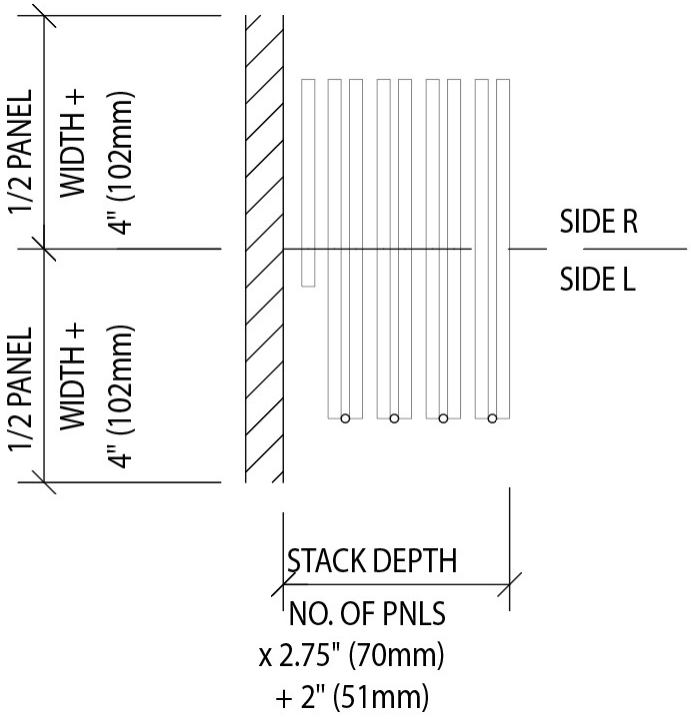

Intermediate Panel Closure (Remote)

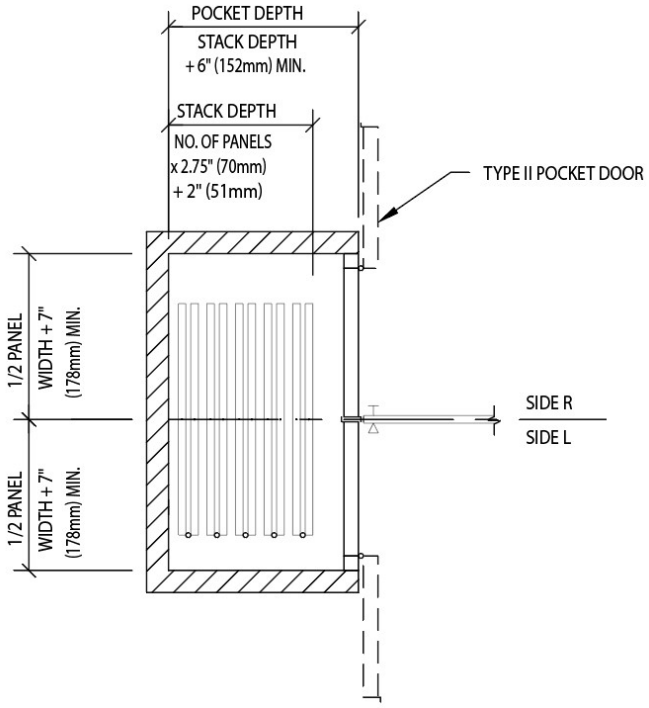

PIVOT PANEL / PASS DOOR HARDWARE OPTIONS

12” (305 mm) Door Pull
Back to Back

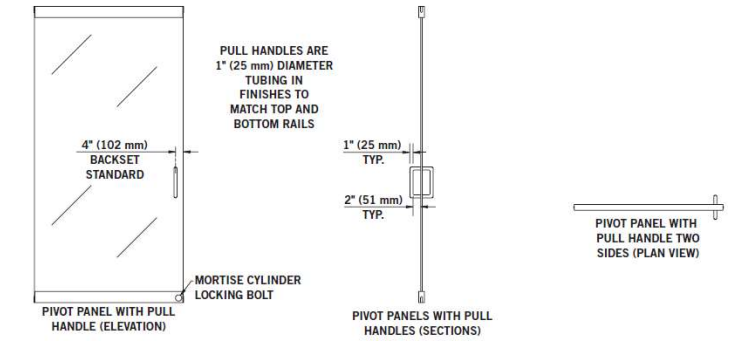

48.81” (1240 mm) Ladder Pull
Back to Back

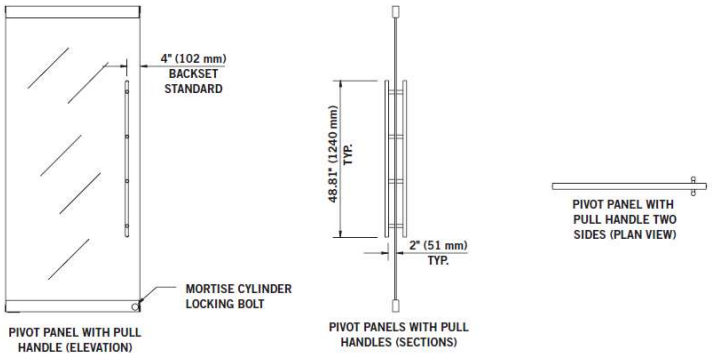

49” (1245 mm) Locking Ladder Pull
Back to Back

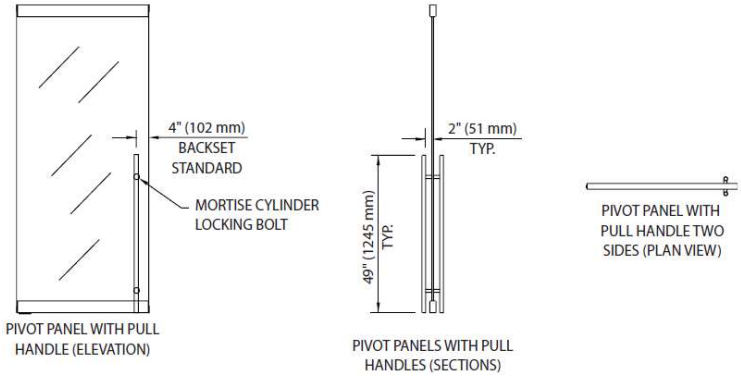

HARDWARE OPTIONS

Interconnecting Floor Bolt	Face Operated Floor Bolt
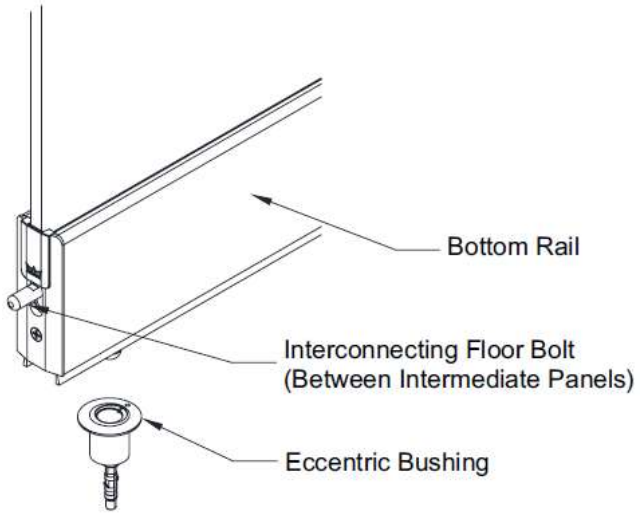	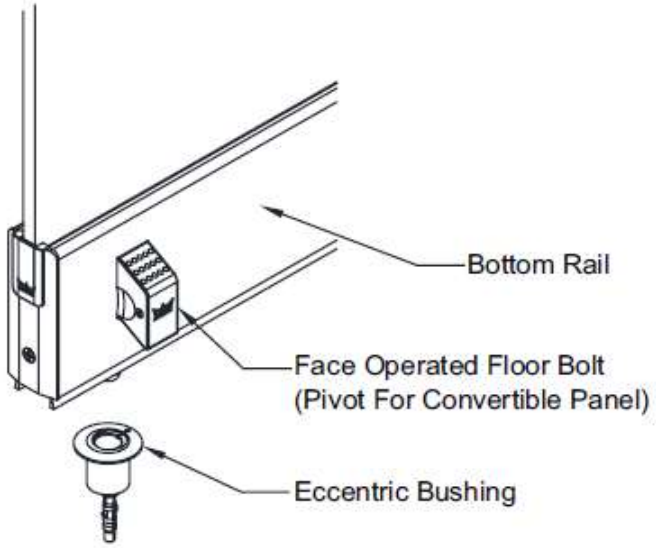
Mortise Cylinder Locking Bolt (Keyed)	**Mortise Cylinder Locking Bolt (Thumb Turn)**
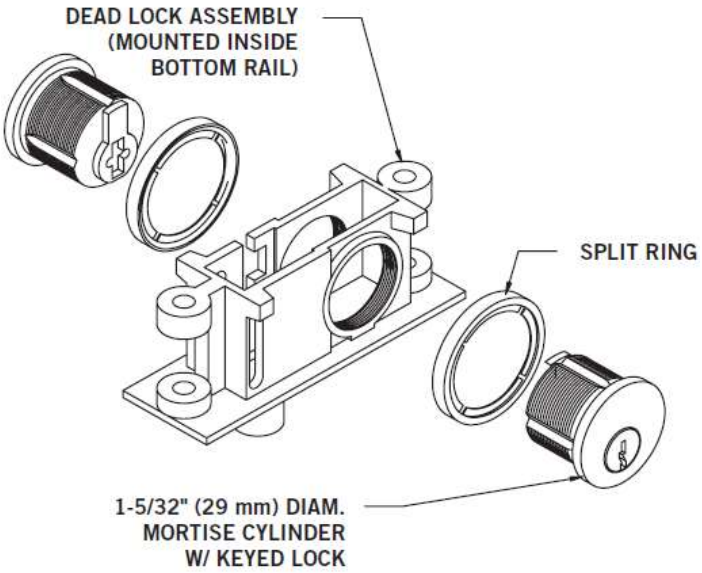	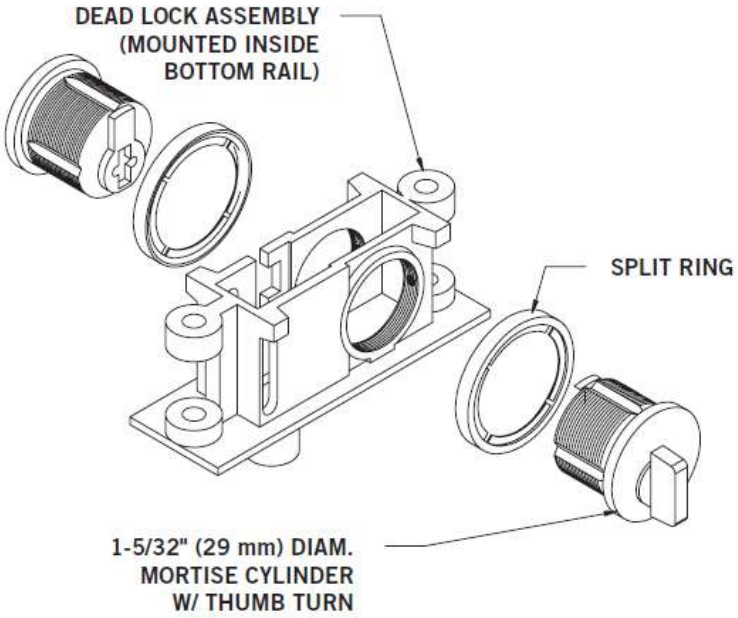

Floor Strike for Foot Bolt (Eccentric Bushing)	BTS80 Door Closer
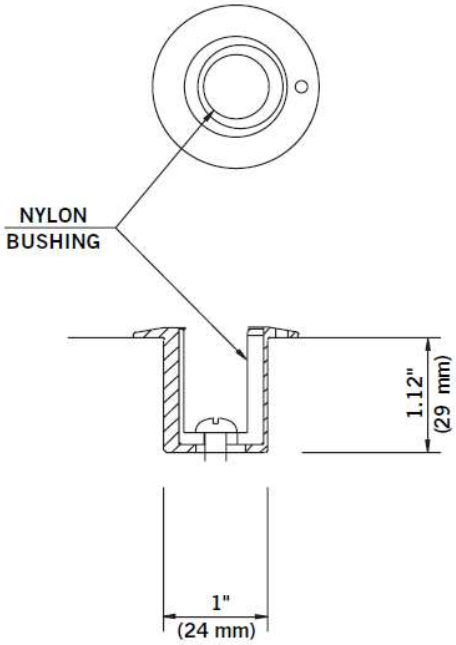	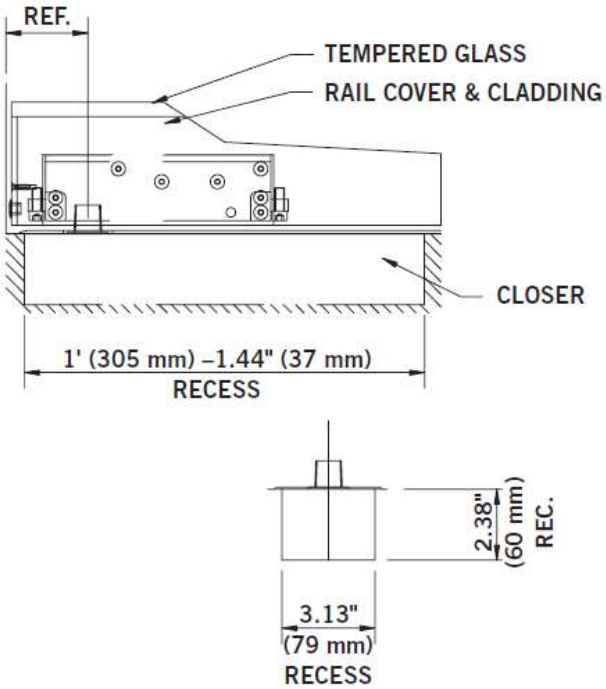
Hinge Panel Joint	
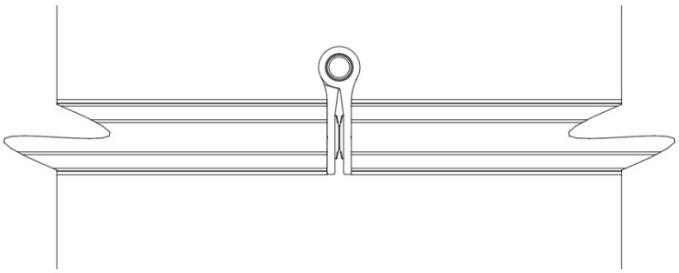	

HARDWARE OPTIONS – FULLY FRAMED

Panel Joint	Hinge Panel Joint – Fully Framed
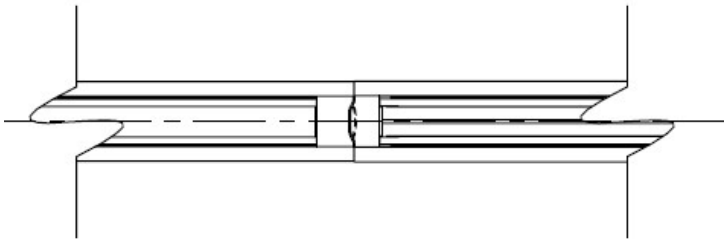	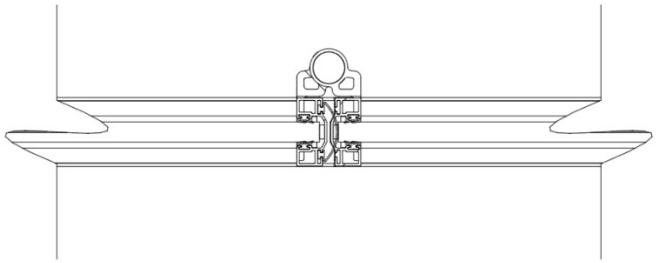
Pivot Panel Jamb	**Lead Jamb**
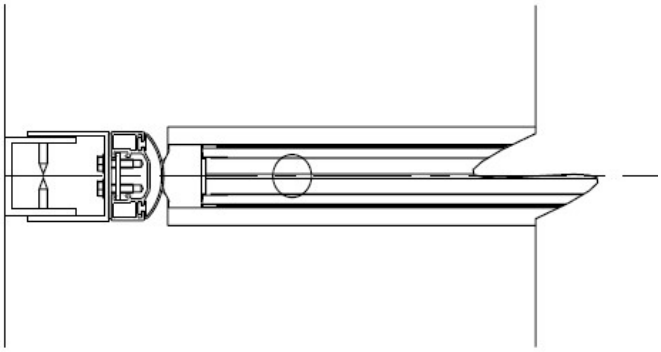	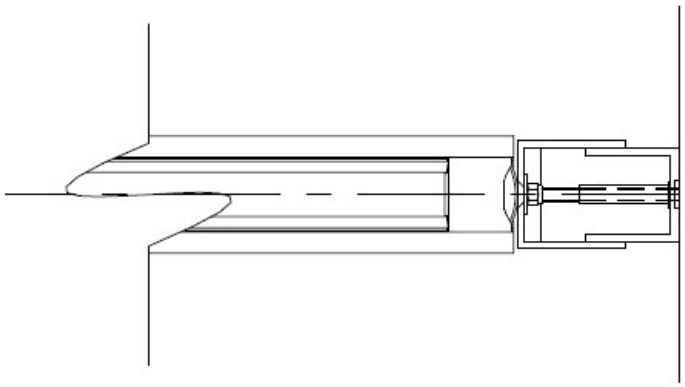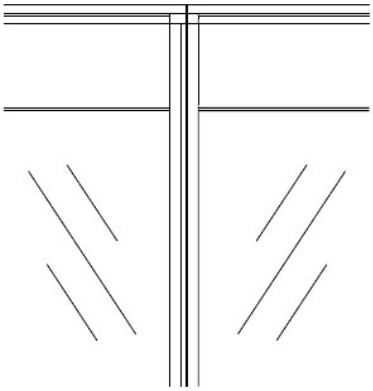
Panel Corner